Ice Storage and Transport Systems with SmartGATE™

Order parts online
www.follettice.com

Installation, Operation and Parts Manual

Before Service Number A36000

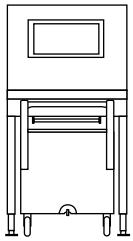

ITS500-31

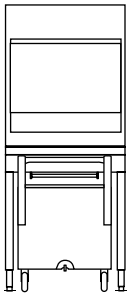

ITS700-31

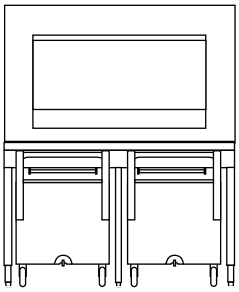

ITS1350-60

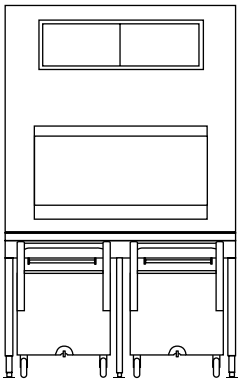

ITS2250-60

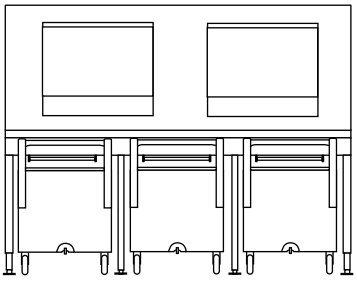

ITS1700-90

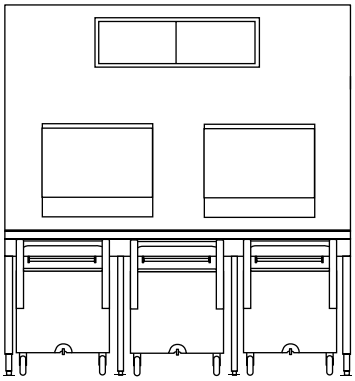

ITS3250-90

Following installation, please forward this manual to the appropriate operations person.

FOLLETT
Cool Ideas For Ice Management

801 Church Lane • PO Box D, Easton, PA 18044, USA
Toll free (800) 523-9361 • (888) 2-FOLLETT
(610) 252-7301 • Fax (610) 250-0696 • www.follettice.com

207891R01

Table of contents

Installation procedures **3**

Operation **6**

Cleaning **9**

Parts **11**

Follett Corporation
Equipment Return Policy

Follett equipment may be returned for credit under the following conditions:

1. The equipment is new and unused.
2. A return authorization number has been issued by customer service.
3. Follett receives the equipment at the factory in Easton, PA within 30 days of the issue of the return authorization number.
4. The equipment must be returned in Follett packaging. If the packaging has been damaged or discarded, Follett will forward, at the customer's expense, new packaging.

Note: Return freight charges are the responsibility of the customer. If equipment is returned and is damaged because of improper packaging, Follett Corporation will not be held responsible.

Credit will be issued when:
The equipment has been inspected by Follett and deemed suitable to be returned to stock.

Note: A 15% restocking charge will be deducted from the credit. If the cost to return the product to stock exceeds 15%, the actual cost will be deducted.

Welcome to Follett

Follett Ice Storage and Transport Systems enjoy a well-deserved reputation for excellent performance and long-term reliability. To ensure that your equipment delivers this same degree of service, please read this manual carefully before installing or operating the system. If you have questions during installation or operation of this system, please call our technical service group at (800) 523-9361 or (888) 2-FOLLETT or (610) 252-7301.

Before you begin – After uncrating, remove all packing material and inspect equipment for shipping damage. If damage is found, notify shipper immediately and contact Follett so that we can help in filing a claim, if necessary.

Installation

Important cautions and operating rules

Read this manual completely before assembling or operating Ice Transport System and follow cautions and instructions listed below.

To avoid damage to Ice Transport System and injury during operation:

- Do not move Ice Transport System once icemaker has been installed
- Anchor flanged feet to floor as instructed on page 4
- Only use paddle provided to assist ice flow
- Only use cart to transport ice and reinstall carefully in bin bay when not in use

To avoid injury during operation of unit:

- Keep entire body clear of bin when breaking up ice
- Keep head and face away from paddle handle when breaking up ice
- Lock caster before scooping or shoveling ice from cart and when parked in bay
- Keep floor around Ice Transport System free of ice and water
- Always operate cart at a slow, reasonable speed

For best operation and to ensure delivery of clean, sanitary ice:

- Be sure bin system is level in both directions to provide proper drainage
- Position cart in bay before opening hopper door
- Install charcoal water filter on inlet water for icemaker
- Hang paddle in supplied bracket after each use
- Keep paddle clean and in good repair to avoid ice contamination
- Cover ice with cart lid when transporting
- Follow instructions in this manual for bin and cart cleaning and maintenance
- Drain melt water from cart when positioned in bay by opening drain valve
- Keep glass, dirt and other foreign objects out of bin and cart at all times

Uncrating cart

1. Remove paddle from skid by cutting plastic straps.
2. Cut strap holding front axle to skid.
3. Remove wheel chocks from skid at handle end of cart.
4. Roll cart(s) out of base section.
5. Remove tape holding lid to cart.
6. Remove lid storage bracket(s) from inside cart (brackets may be installed on left or right side of bin. See Installing Bin section.)

Uncrating and installing base section

1. Remove screws holding flanged feet and tie-down straps to skid and remove skid.
2. Remove packing material from inside legs and around shutter door.
3. Position base in intended position and adjust feet to level unit in both directions.
4. Mark position of each flanged foot anchoring hole.
5. Move base out of the way and install anchors for 1/4" bolts in floor.
6. Reposition unit in intended position and anchor base unit to floor through flanged feet.

When leveling, do not extend any leg more than 1" (26mm) for total leg height no greater than 2.125" (54mm).

Legs MUST be secured to floor through feet to avoid possible movement and resulting injury.

Installing bin

1. Remove 4 bolts fastening skid to underside of bin.
2. Remove all protective wrap from exterior.
3. Run 1/8" bead of supplied silastic in center of each gasket band on base.
4. Install bin section on base section, taking care that locating pins in base engage holes in bin.
5. Use fasteners provided to install paddle support bracket on right or left side of bin in holes provided.
6. Remove paper from back of cart lid storage bracket(s) and position brackets on side of bin.
7. Remove all tape and temporary fastenings from door assemblies and outside of bin.
8. Mount icemaker(s) on top of bin in accordance with icemaker manufacturer's instructions.
9. Install tie-down straps.

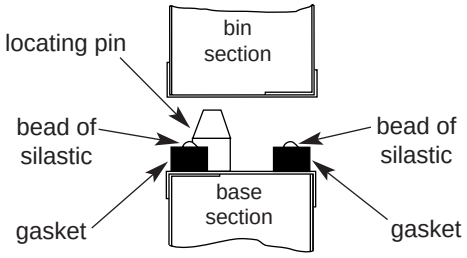

Installing tie-down straps

Tie-down straps to secure bin to base are provided on each side of unit. Straps MUST be installed to avoid possible injury should unit move. Bolt unit to wall for increased stability, and bolt to floor to prevent side-to-side movement.

1. Remove screws from rivnuts on each side of bin section.
2. Reposition tie-down strap until slot matches rivnut opening.
3. Reinstall screws in rivnuts and tighten.

Sealing bin interior

The joint between base and bin sections must be sealed with silastic to prevent leakage and/or ice contamination which may void the warranty. One or more shutter doors must be removed to seal bin.

1. Support shutter door(s) with one hand and remove thumbscrews from side of shutter door(s) at underside of base.
2. Pivot door(s) downward to remove.
3. Gain access through this opening and seal entire perimeter of seam between bin and base with provided sealant or equivalent.
4. After sealant has set but before shutter door(s) have been reinstalled, clean inside of bin following instructions in this manual.
5. Reinstall shutter door(s).

Use sealant provided to seal **entire perimeter of seam** where base and bin sections join.

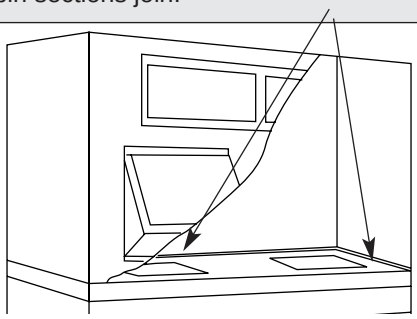

cross section of ITS sections joined

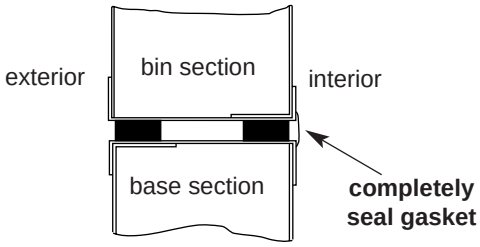

Plumbing connections

It is recommended that a full width grated floor drain be installed in front of bin.

1. Units are shipped for a right side exiting drain. To drain to left, remove lower drain trough, switch positions of left and right hand lower trough brackets and reinstall lower trough.
2. Connect drain line to 1" MPT drain fitting.
3. Make final connections to icemaker.

Affixing operating labels

Operating labels taped to base front educate staff to shutter door operation. If desired, these labels can be affixed **permanently** by peeling off back paper and affixing in locations desired.
Note: Adhesive backing is extremely strong and labels cannot be easily removed once installed.

Removing lower door assembly

(only if required for access through narrow doors)

1. With lower access door closed remove Phillips head screw and washer from hinge area on each side of lower access door.
2. Insert screwdriver between door and hinge bracket on one side of door and gently push against bracket to provide room for door stud to clear bracket.
3. Remove access door.
4. Pull up on SmartGATE to remove.
5. Remove three or four (3 or 4) screws along top of door assembly.
6. Pull forward on assembly and remove.

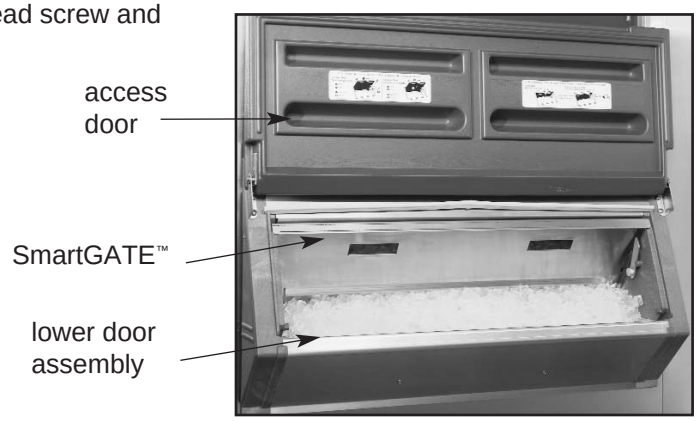

Reinstalling door assembly

1. Reinstall lower door assembly in bin opening.
2. Reinstall three or four (3 or 4) screws in hood at top of door assembly.
3. Reinstall SmartGATE in side panel tracks and push down to seat.
4. With door closed, insert one door stud through hinge bracket.
   Note: For proper operation the access door must be reinstalled in the closed position.
5. On other side, insert screwdriver between door and hinge bracket and gently push against bracket to provide room for door stud to clear bracket.
6. Reinstall washers and screws in lift door and tighten.
7. Check door to ensure proper operation.

Ice guide adjustment

Some ice types are very “slippery” and may flow over sides of cart when exiting hopper. Ice guides hang down below hopper and help contain flowing ice inside cart.

Guides are installed in highest position at factory, providing 3/4" clearance to top of cart when legs are in full down position. If legs are adjusted up during leveling of Ice Transport System, ice guides should be lowered to maintain 3/4" (19mm) clearance. Access to sides of Ice Transport System is required to perform operation.

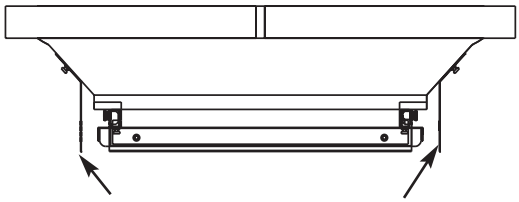

brackets on underside of hopper to which ice guides are secured

To reposition ice guides after legs have been adjusted:

1. Position cart (with totes, if so equipped) in bay below shutter door opening.
2. Determine amount guides must be lowered to maintain 3/4” (19mm) clearance.
3. Remove thumbscrews holding guides.
4. Select hole to reposition guide at proper level and resecure with thumbscrew.
5. Repeat process for each bay in system.

Operation

Cart drain operation

1. Position cart all the way in bay.
2. Lock caster to prevent cart movement.
3. To open drain, pull knob out.
4. To close, push knob in.



Cart lids

1. Hang cart lids on brackets on bin side when carts positioned in bay.
2. Remove from bracket and place lid on cart when transporting ice.
3. To avoid placing lid on floor, position lid horizontally on cart lip, resting lid against cart handle when unloading ice from cart.
4. Reinstall lid in bracket on side of bin before placing cart in bay.

Ice Transport System operation

A Pushing cart into bay

1. PUSH cart all the way to back.
2. PULL cart drain open.
3. Lock brake on caster DOWN.

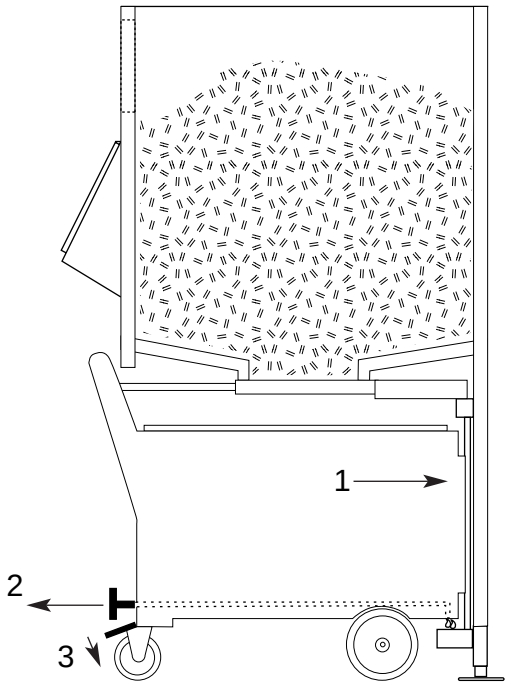

B Loading ice

1. PULL shutter handle open.
2. Store handle up against bin.

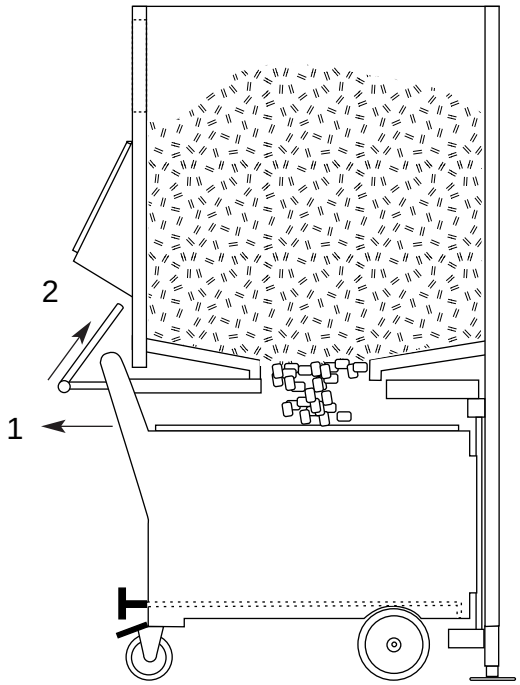

C Pulling cart out

1. PUSH shutter handle closed.
2. PUSH cart drain closed.
3. Release brake on caster.

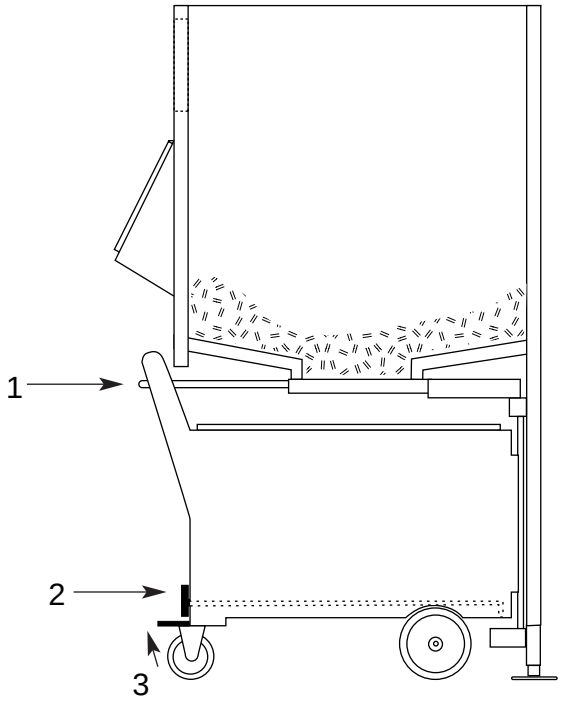

D Transporting ice

1. PULL cart from base.
2. Place lid on cart.

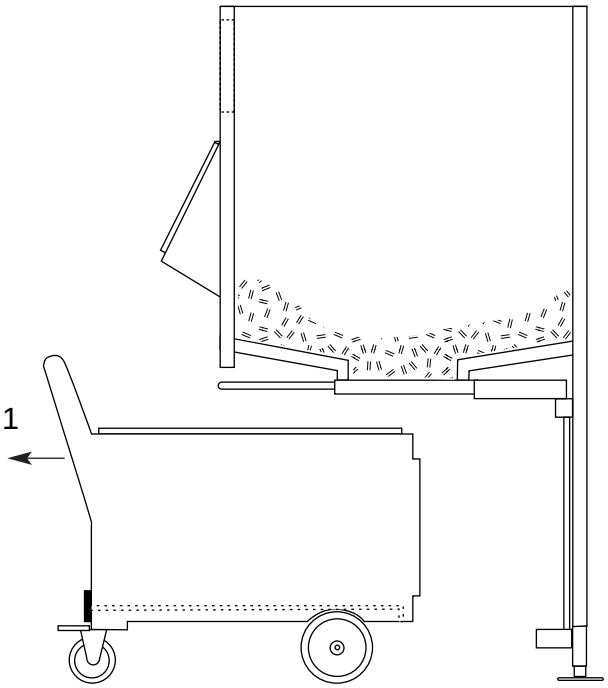

Breaking ice bridges

It may be necessary to use the paddle to break up ice bridges that occur along the sides and in the middle of the bin. This often happens if ice has been held in storage for a period of time without use.

Use supplied paddle accessory to break up bridges (see caution below):

1. Completely knock down all ice from sides and back of bin.
2. Knock down any bridge that has occurred in middle.
3. Agitate paddle back and forth to break up congealed ice mass.

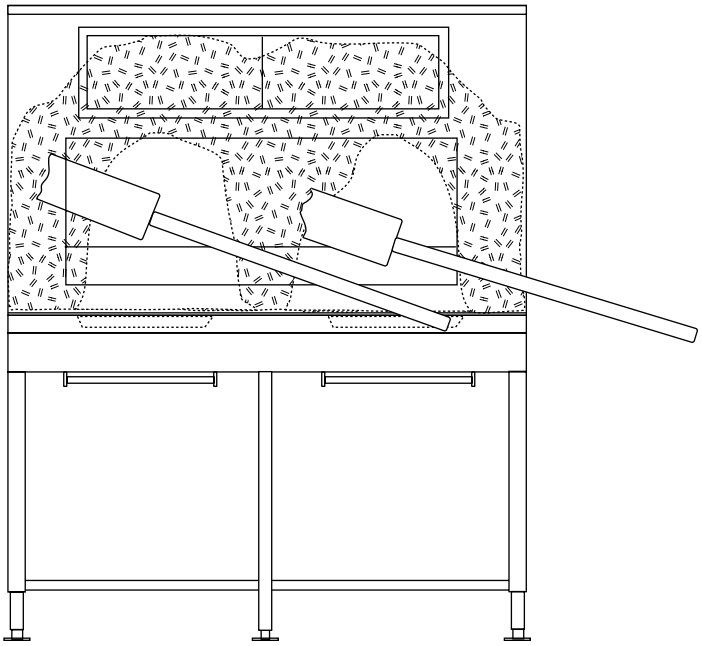

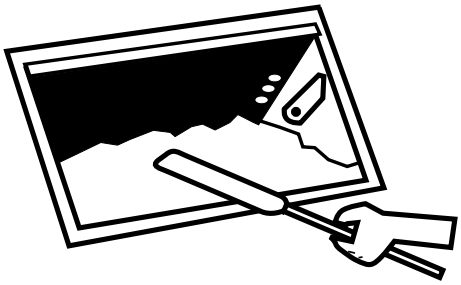

Do NOT dig at ice. Instead, break away "legs" that are holding bridges. Ice above will then fall.

To avoid injury, do not attempt to break up bridged ice through upper windows or hopper shutter door. A falling ice bridge can cause paddle to lift. Keep head and face away from paddle handle to avoid injury.

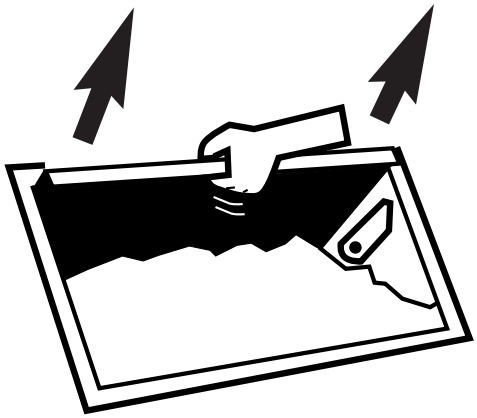

SmartGATE™ operation

SmartGATE can be adjusted and locked at one of several levels to accommodate flow characteristics of different types of ice.

Bin is shipped with SmartGATE in full down position. SmartGATE can be raised and locked in higher position for better flow or when more access is needed.

Cleaning

Clean and sanitize bin and cart(s) interiors prior to use and on regular schedule as needed. Use non-chlorine based cleaner and sanitizer suitable for use in a food zone. Do NOT use chlorine-based cleaners, which can cause staining and pitting of stainless steel components. Do not run Totes through a dishwasher. Turn off icemaker(s) and remove ice from bin before beginning.

Bin drain system cleaning

1. Remove upper tray(s) and lower drain trough(s), wash with cleaning solution, rinse and reposition in brackets.
2. Saturate a cloth with cleaning solution and insert through a loop in end of a piece of wire.
3. Feed wire through vertical drain tube, and pull wire and cloth through tube.

Drain tray cleaning

1. Remove two thumbscrews on side of drain tray and pull drain tray forward to remove.
2. Wash with an approved cleaner.

Shutter doors and rails

1. Support hopper shutter door with one hand and remove thumbscrews from side of hopper shutter door at under side of base section.
2. Pivot door down to remove.
3. Wash door, rinse thoroughly and sanitize.
4. Remove thumbscrews holding front and rear of shutter tracks.
5. Wash tracks, rinse thoroughly and sanitize.

Cart and cart drain system

1. Wash cart liner with an approved cleaner.
2. Rinse and sanitize.

Cleaning bin before use and ongoing bin maintenance

Interior of bin must be cleaned and sanitized prior to use and should be cleaned on routine basis during use (see next page).

Interior bin care

Follett ice storage bins with SmartGATE™ are equipped with polyethylene liner walls and stainless steel bottoms, which should be cleaned and sanitized periodically with Ecolab Mikro-chlor Cleaner or any product suitable for use in a food zone.

Important: Follett Corporation recommends installing a properly-sized, activated carbon (charcoal) water filter on water supply to icemaker to remove chlorine.

1. Remove upper inspection windows by lifting and pulling forward.
2. Remove hopper shutter door (see above) to gain access to bin interior.
3. From inside bin, remove thumbscrews holding access door plate and remove plate.
4. Wash bin walls, hopper, access door plate and partition (if any), rinse and sanitize.

Exterior bin care

Exterior stainless steel surfaces can be cleaned with a stainless steel cleaner such as 3M Stainless Steel Cleaner & Polish or equivalent.

Technical assistance available toll free

Should you have any questions concerning installation or maintenance of Follett ice storage bins, please call our technical service department at (800) 523-9361 or (888) 2-FOLLETT, or (610) 252-7301 between 8 a.m. and 5 p.m. Eastern time.

Parts

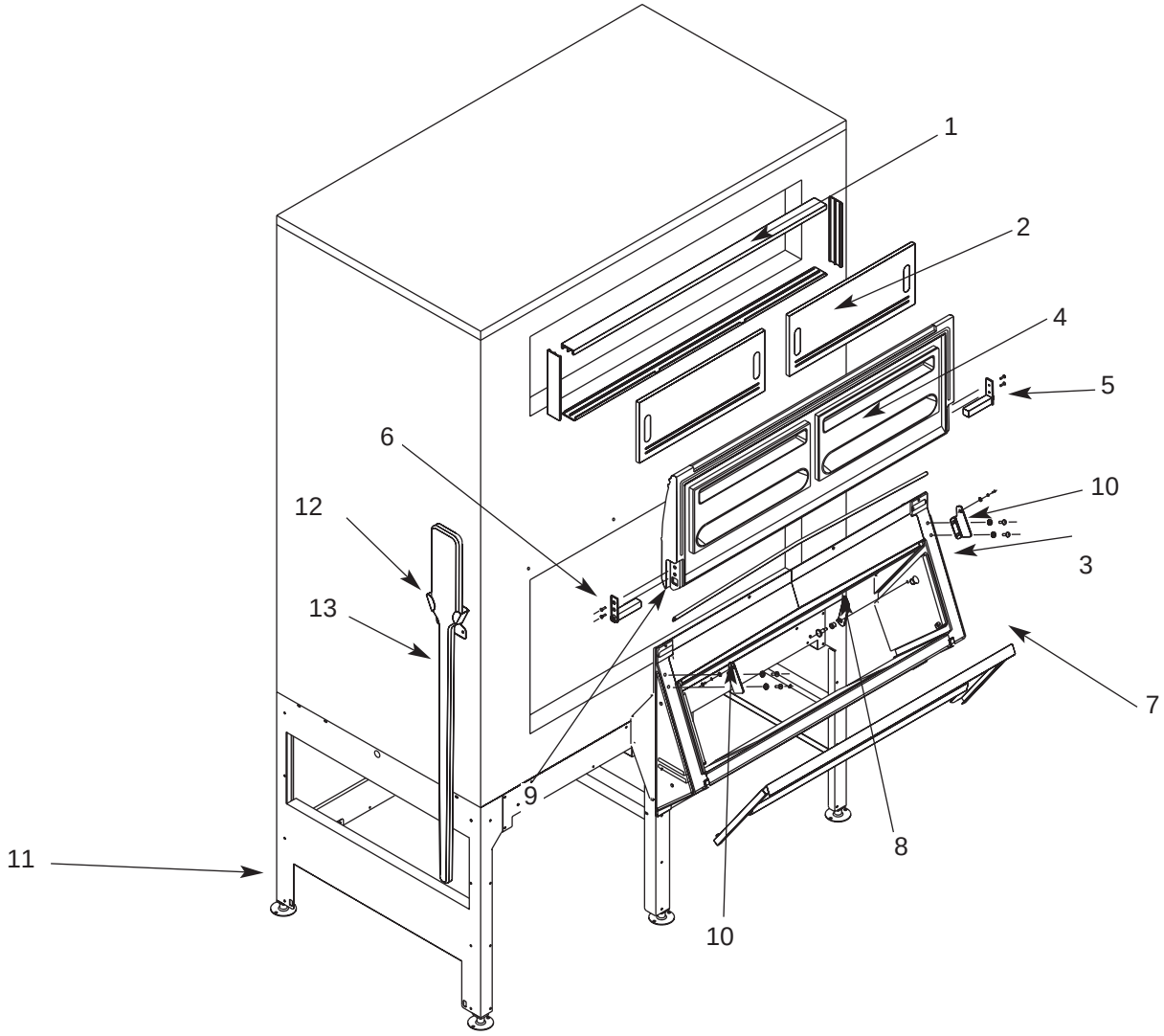

Reference #	Description	Part #
1	Track, inspection window, 42" (used with 502237 window)	501277
Not shown	Track, inspection window, 27" (used with 502264 window)	501401
2	Inspection window, 21.125"W x 8.625"H (2 used per bin)	502237
Not shown	Inspection window, 12.5"W x 9"H (2 used per bin), for ITS500	502264
3	Frame assembly, lower door, 45" (includes 502177 & 502182)	502361
Not shown	Frame assembly, lower door, 28" (includes 502176 & 502181)	502365
4	Door, outer lift, 45" (includes 502178 & 502179)	502177
4	Door, outer lift, 28" (includes 502178 & 502179)	502176
5	Hinge, RH door mount (includes hardware)	502179
6	Hinge, LH door mount (includes hardware)	502178
7	Ice Gate, 40", w/o holes	502182
7	Ice Gate, 24", w/o holes	502181
8	Catch, Ice Gate	502185
9	Gasket, 41.5"	502364
9	Gasket, 24.5"	502368
10	Hinge bracket, bin mount, LH/RH, (pair, includes hardware)	502180
Not shown	Strap, hold down	502214
11	Foot, flanged (1), bolt base	502196
12	Bracket, ice paddle	502064
13	Paddle, ice	502063
Not shown	Shovel, ice	501796
Not shown	Bracket, ice shovel	502260

Drain system

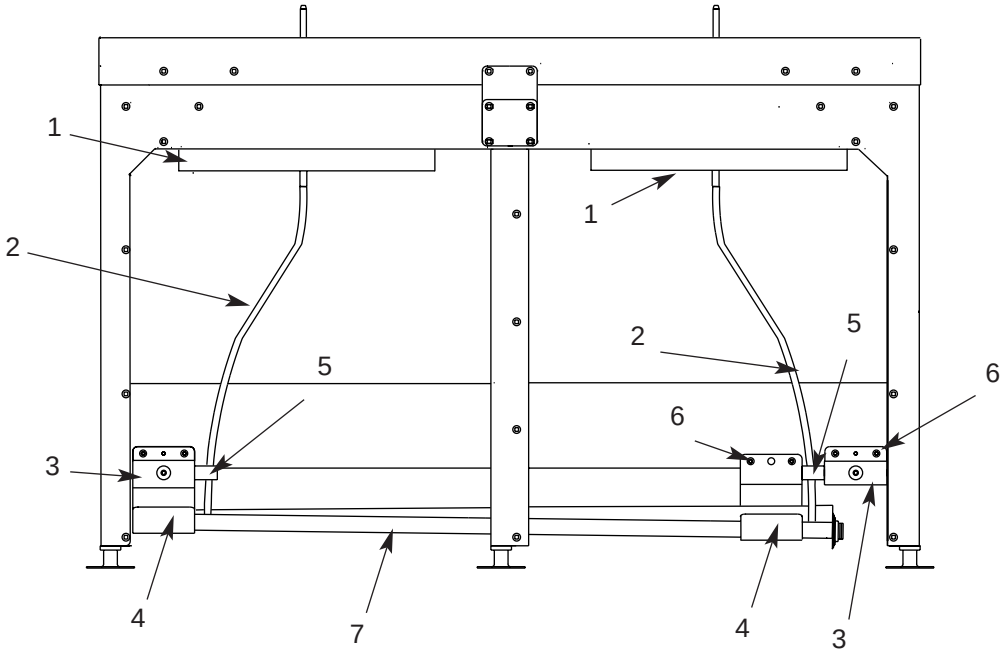

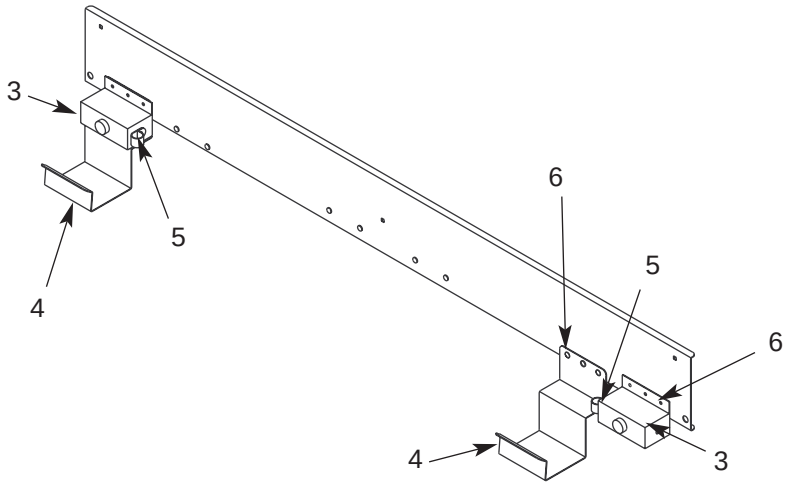

Reference #	Description	Part #
1	Drain pan – includes (2) 501100	502273
2	Tube, vertical drain	502276
3	Bumper – includes (1) 502286, (2) 502287	502274
4	Bracket, lower drain trough – includes (2) 502287	502275
5	Clamp, vertical drain tube – includes (1) 501100	502286
6	Screw, 10-32 x 1/2"	502287
7	Drain trough (single bay – ITS500, ITS700)	501895
7	Drain trough (double bay – ITS1350, ITS2250)	501896
7	Drain trough (triple bay – ITS1700, ITS3250)	501897
Not shown	Thumbscrew, 10-32 x 1/2" (1)	501100
Not shown	Sealant, 5 oz tube	500727

Shutter door assembly

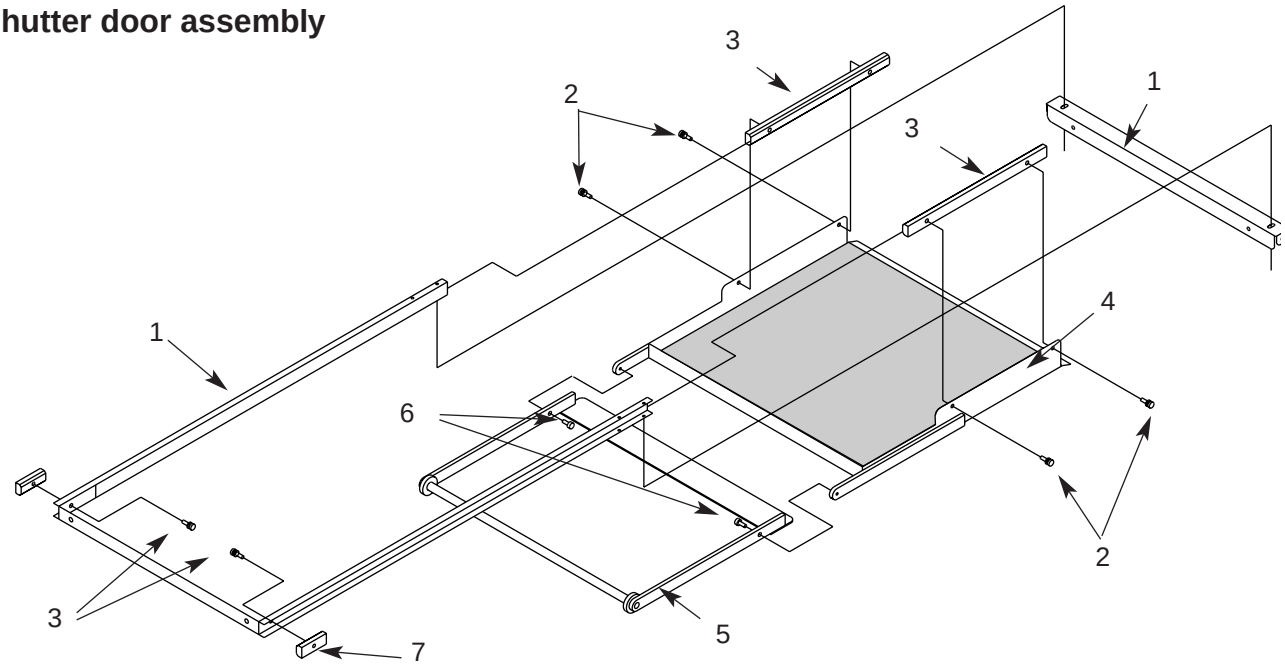

Reference #	Description	Part #
1	Track assembly – includes (2) 502272, (4) 501100	502121
2	Thumbscrew, 10-32 X 1/2" (1)	501100
3	Bearings (2), shutter door, nylon 11-7/16" – includes (4) 501100	502269
4	Door assembly, shutter (includes 502270 and 502269)	502271
5	Handle, shutter – includes (2) 502229	502270
6	Shoulder screw (1), shutter handle	502229
7	Spacer, bearing – includes (1) 501100	502272
Not shown	Ice guide, left – includes (2) 501100	502277
Not shown	Ice guide, right – includes (2) 501100	502278
Not shown	Bracket, ice guide – includes (2) 501100 (page 4)	502280
8	Cover, joint, white hopper — two and three bay models only	502279
8	Cover, joint, blue hopper — two and three bay models only	00112821

Multi-bay joint cover

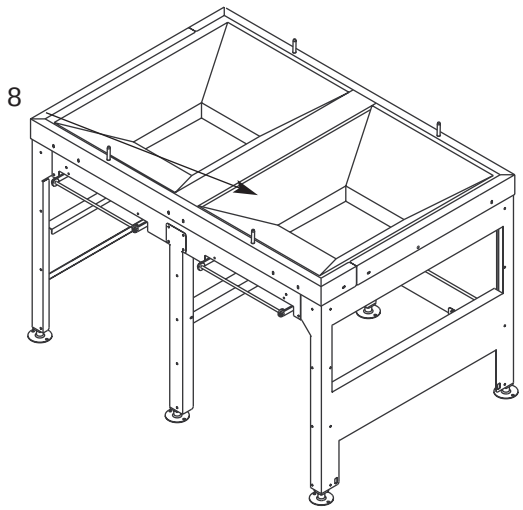

Cart

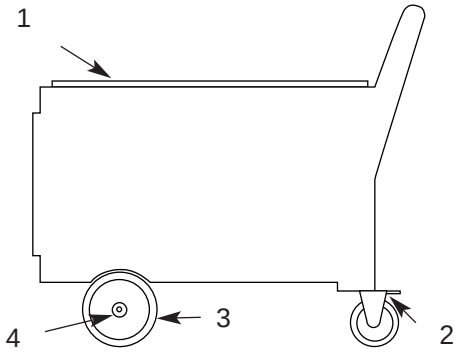

Side view – cart

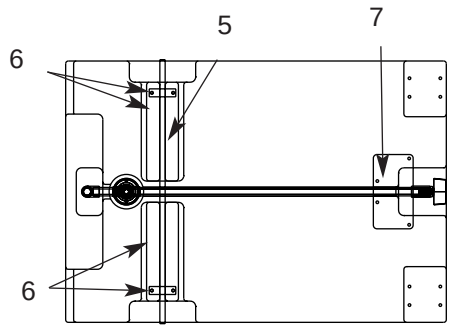

Bottom view – cart

Reference #	Description	Part #
1	Lid	501744
Not shown	Caster, swivel, Rhombus (includes mounting bolts & lock washers)	502528
2	Caster, swivel, locking, Rhombus (incls mounting bolts & lock washers)	502529
2	Caster, Colson upgrade kit, to replace OBSOLETE Colson casters with Rhombus casters	502564
Not shown	Bushing, 8" wheel (Rhombus)	502531
3	Wheel, 8", Rhombus, fixed, rounded tire (includes 2 cotter pins & 2 washers)	502530
3	Wheel, 8" fixed, flattened tire (includes 2 cotter pins & 2 washers)	502025
4	Push cap, axle, 25.125" - OBSOLETE - order part # 502026	
5	Axle, 24.125" (includes 2 cotter pins & 4 washers)	502332
6	Strap, axle (2 req. per axle)	502028
7	Plate, drain support	502061
Not shown	Drain tray, tote	502304
Not shown	Bracket, lid holder	502055
Not shown	Ice removal Tote (1)	501919
Not shown	Handle, Tote	502097
Not shown	Washer, Axle	502230
Not shown	Cotter Pin	502040

Cart drain

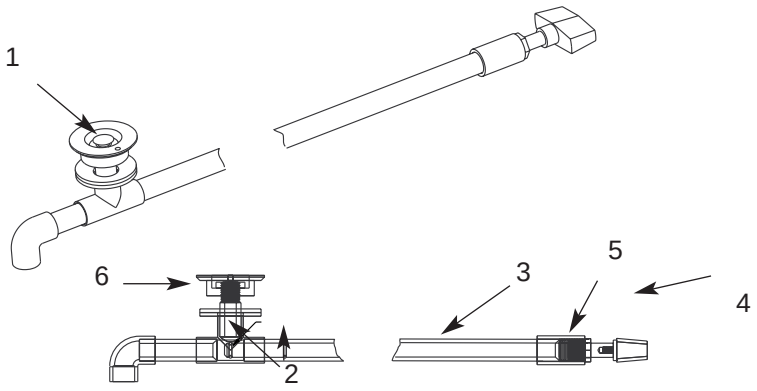

All	Drain assembly (includes entire assembly shown)	502021
1	Vent plug	502106
2	O-ring, drain assembly	502022
3	Rod, drain (includes 502061 plate drain support)	502217
4	Knob, drain	502029
5	Retaining bushing	502289
6	Fitting, drain assembly	501743

FOLLETT
Cool Ideas For Ice Management

801 Church Lane • PO Box D, Easton, PA 18044, USA
Toll free (800) 523-9361 • (888) 2-FOLLETT
(610) 252-7301 • Fax (610) 250-0696 • www.follettice.com

207891R01
08/03