Ice Storage and Transport Systems with SmartGATE®

Order parts online
www.follettice.com

Installation, Operation and Parts Manual

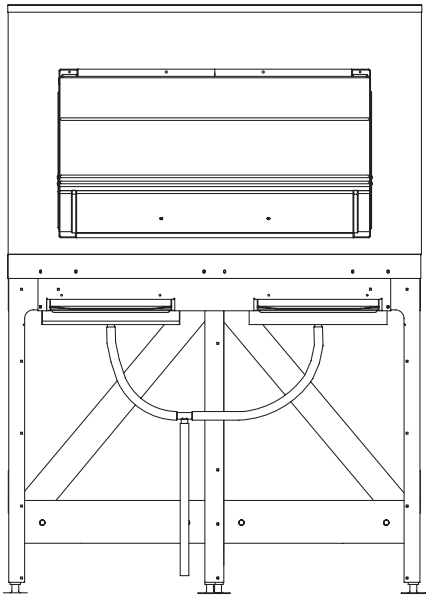

ITS1350-60

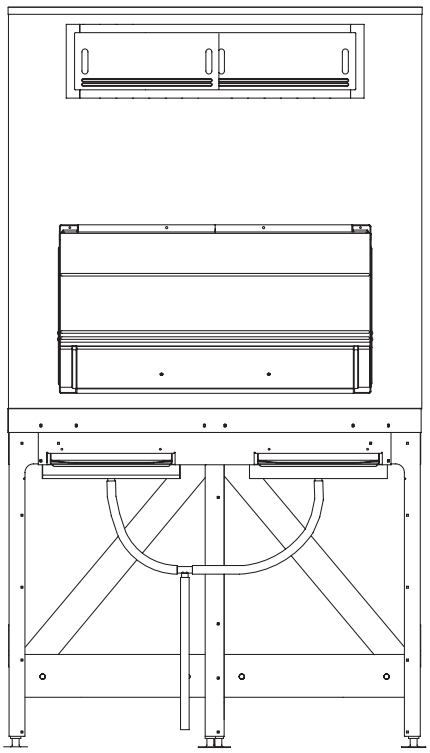

ITS2250-60

Following installation, please forward this manual to the appropriate operations person.

FOLLETT®
Innovative solutions, inspired by ice

801 Church Lane • Easton, PA 18040, USA
Toll free (877) 612-5086 • +1 (610) 252-7301
www.follettice.com

00147694R02

Table of contents

Welcome to Follett Corporation **4**
Important cautions **4**
Installation **5**
- Uncrating and installing base section **5**
- Installing bin **5**
- Installing tie-down straps **5**
- Sealing bin interior **5**
- Plumbing connections **6**
- Affixing operating labels **6**
- Removing lower door assembly **6**
- Reinstalling door assembly **7**
- Ice guide adjustment **7**
- Repositioning of ice guides **7**

Operation **8**
- Ice transport system operation **8**
- Breaking ice bridges **9**
- SmartGATE operation **9**

Cleaning **10**
- Bin drain system cleaning **10**
- Drain tray cleaning **10**
- Shutter doors and rails **10**
- Interior bin care **10**
- Exterior bin care **11**

Replacement parts **12**

Follett Corporation
Equipment Return Policy

Follett equipment may be returned for credit under the following conditions:

1. The equipment is new and unused.
2. A return authorization number has been issued by customer service within 30 days after shipment.
3. Follett receives the equipment at the factory in Easton, PA within 30 days after issuance of the return authorization number.
4. The equipment must be returned in Follett packaging. If the packaging has been damaged or discarded, Follett will forward, at the customer's expense, new packaging.

Note: Return freight charges are the responsibility of the customer. If equipment is returned and is damaged because of improper packaging, Follett Corporation will not be held responsible.

Credit will be issued when:
The equipment has been inspected by Follett and deemed suitable to be returned to stock.

Note: A 15% restocking charge will be deducted from the credit. If the cost to return the product to stock exceeds 15%, the actual cost will be deducted.

Welcome to Follett

Follett Ice Storage and Transport Systems enjoy a well-deserved reputation for excellent performance, long-term reliability and outstanding after-the-sale support. To ensure that this equipment delivers that same degree of service, we ask that you take a moment to review this manual before beginning the installation or operating the system. Should you have any questions or require technical help at any point, please call our technical service group, (800) 523-9361 or (610) 252-7301.

Before you begin

After uncrating and removing all packing material, inspect the equipment for concealed shipping damage. If damage is found, notify the shipper immediately and contact Follett Corporation so that we can help in the filing of a claim, if necessary.

Important cautions and operating rules

Read this manual completely before assembling or operating Ice Transport System. Follow the cautions and instructions listed below.

To avoid damage to Ice Transport System and injury during operation:

- Do not move Ice Transport System once icemaker has been installed
- Anchor flanged feet to floor as instructed on page 5
- Only use paddle provided to assist ice flow

To avoid injury during operation of unit:

- Keep entire body clear of bin when breaking up ice
- Keep head and face away from paddle handle when breaking up ice
- Keep floor around Ice Transport System free of ice and water

For best operation and to ensure delivery of clean, sanitary ice:

- Be sure bin system is level in both directions to provide proper drainage
- Position cart in bay before opening hopper door
- Install charcoal water filter on inlet water for icemaker
- Hang paddle implement in supplied bracket after each use
- Keep paddle clean and in good repair to avoid ice contamination
- Follow instructions in this manual for bin cleaning and maintenance
- Drain melt water from cart when positioned in bay by opening drain valve
- Keep glass, dirt and other foreign objects out of bin at all times

Installation

Uncrating and installing base section

1. Remove paddle from skid by cutting plastic straps.
2. Remove screws holding flanged feet and tie-down straps to skid and remove skid.
3. Remove packing material from inside of legs and around shutter door.
4. Position base in intended position and adjust feet to level unit in both directions.
5. Mark position of each flanged foot anchoring hole.
6. Move base out of way and install anchors for 1/4" bolts in floor (supplied by others).
7. Reposition unit in intended position and anchor base unit to floor through flanged feet.

When leveling, do not extend any leg more than 1" (26mm) for total leg height no greater than 2.125" (54mm).

Legs MUST be secured to floor through feet to avoid possible movement and resulting injury.

Installing bin

1. Remove 4 bolts fastening skid to underside of bin.
2. Remove all protective wrap from exterior.
3. Run 1/8" bead of supplied silastic in center of each gasket band on base.
4. Install bin section on base section, taking care that locating pins in base engage holes in bin.
5. Use fasteners provided to install paddle support bracket on right or left side of bin in holes provided.
6. Remove all tape and temporary fastenings from door assemblies and outside of bin.
7. Mount icemaker(s) on top of bin in accordance with icemaker manufacturer's instructions.
8. Install tie-down straps.

Fig. 1

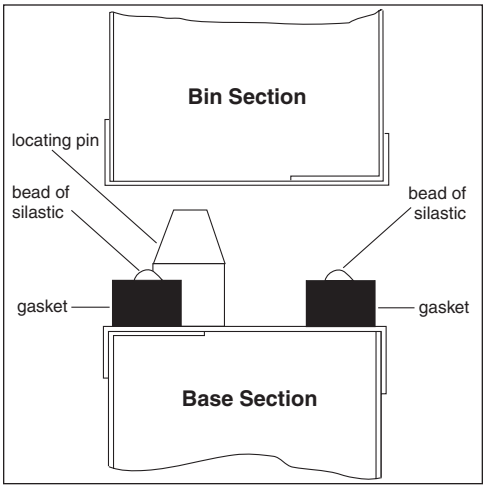

Installing tie-down straps

Tie-down straps to secure bin to base are provided on each side of unit. Straps MUST be installed to avoid possible injury should the unit move. Bolt unit to wall for increased stability, and bolt to floor to prevent side-to-side movement.

1. Remove screws from rivnuts on each side of bin section.
2. Reposition tie-down strap up until slot matches rivnut opening.
3. Reinstall screws in rivnuts and tighten.

Sealing bin interior

The joint between base and bin sections must be sealed with silastic to prevent leakage and/or ice contamination and potential voiding of warranty. One or more shutter doors may need to be removed to seal bin.

1. Support shutter door(s) with one hand and remove thumbscrews from side of shutter door(s) at underside of base.
2. Pivot door(s) downward to remove.
3. Gain access through this opening and seal entire perimeter of seam between bin and base with provided sealant or equivalent.
4. After sealant has set but before shutter door(s) have been reinstalled, clean inside of bin following instructions in this manual.
5. Reinstall shutter door(s).

Fig.2 – Use sealant provided to seal entire perimeter of seam where base and bin sections join.

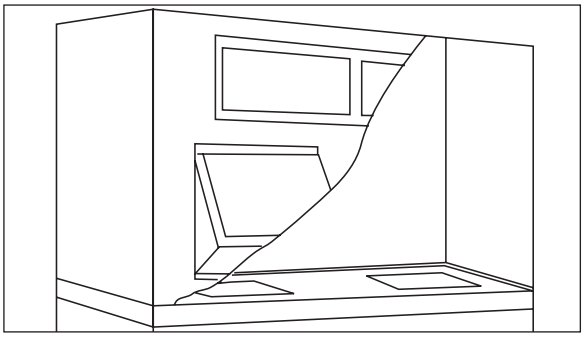

Fig. 3 – Cross section of ITS sections joined

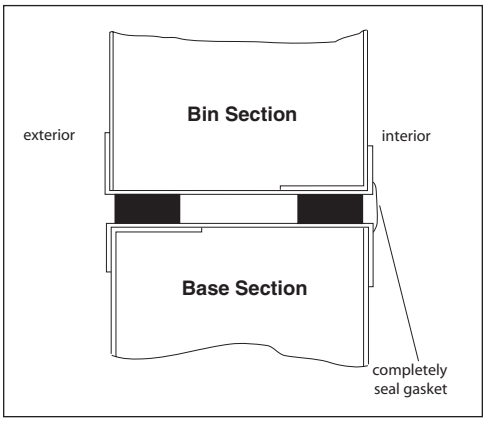

Plumbing connections

Note: It is recommended that a full width grated floor drain be installed in front of bin.

1. Make final connections to icemaker.
2. Make final connections to vertical drain tube, 1" ID.

Affixing operating labels

Operating labels taped to base front educate staff to shutter door operation. If desired, these labels can be affixed **permanently** by peeling off back paper and affixing in locations desired.

Note: Adhesive backing is extremely strong and labels cannot be easily removed once installed.

Removing lower door assembly

(only if required for access through narrow doors)

1. With lower access door closed remove Phillips head screw and washer from hinge area on each side of lower access door.
2. Insert screwdriver between door and hinge bracket on one side of door and gently push against bracket to provide room for door stud to clear bracket.
3. Remove access door.
4. Pull up on SmartGATE to remove.
5. Remove three or four (3 or 4) screws along top of door assembly.
6. Pull forward on assembly and remove.

Fig. 4

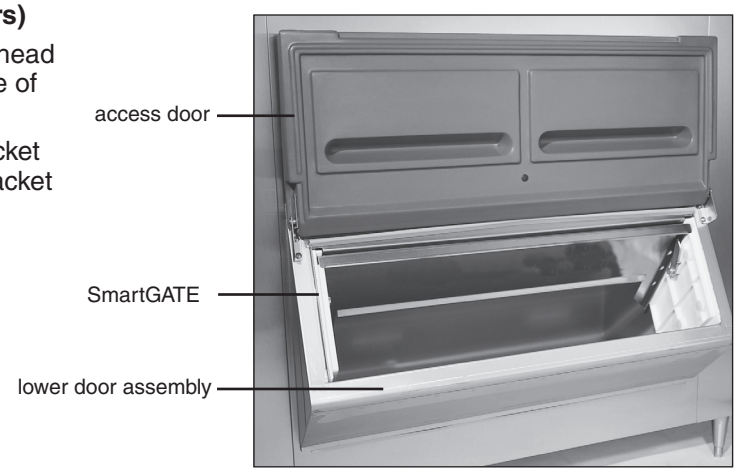

Reinstalling door assembly

1. Reinstall lower door assembly in bin opening.
2. Reinstall three or four (3 or 4) screws in hood at top of door assembly.
3. Reinstall SmartGATE in side panel tracks and push down to seat.
4. With door closed insert one door stud through hinge bracket.

   Note: For proper operation the access door must be reinstalled in the closed position.
5. On other side, insert screwdriver between door and hinge bracket and gently push against bracket to provide room for door stud to clear bracket.
6. Reinstall washers and screws in lift door and tighten.
7. Check door to ensure proper operation.

Ice guide adjustment

Some ice types are very “slippery” and may flow over sides of cart when exiting hopper. Ice guides hang down below hopper and help contain flowing ice inside cart.

Guides are installed in highest position at factory, providing 3/4" clearance to top of cart when legs are in full down position. If legs are adjusted up during leveling of Ice Transport System, ice guides should be lowered to maintain 3/4" (19mm) clearance. Access to sides of Ice Transport System is required to perform operation.

Fig. 5

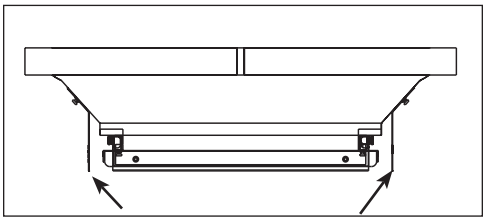

Brackets on underside of hopper to which ice guides are secured.

To reposition ice guides after legs have been adjusted

1. Position cart in bay below shutter door opening.
2. Determine amount guides must be lowered to maintain 3/4" (19mm) clearance.
3. Remove thumbscrews holding guides.
4. Select hole to reposition guide at proper level and resecure with thumbscrew.
5. Repeat process for each bay in system.

Operation

Ice Transport System Operation

A

Pushing cart into bay

1. PUSH cart all the way to back.

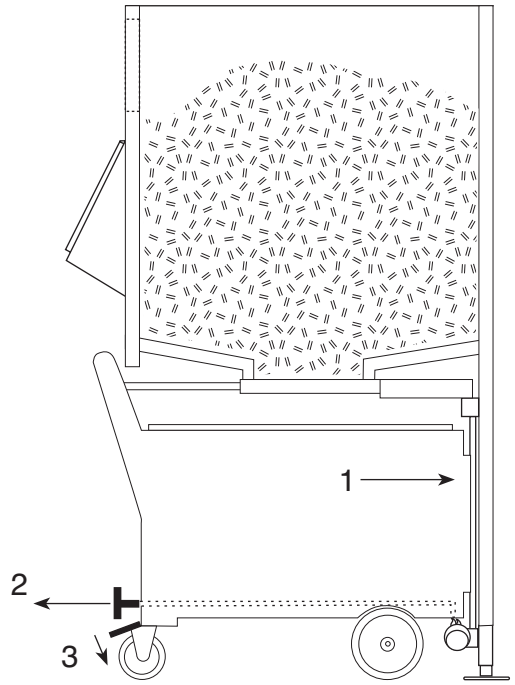

B

Loading ice

1. PULL shutter handle open.
2. Store handle up against bin.

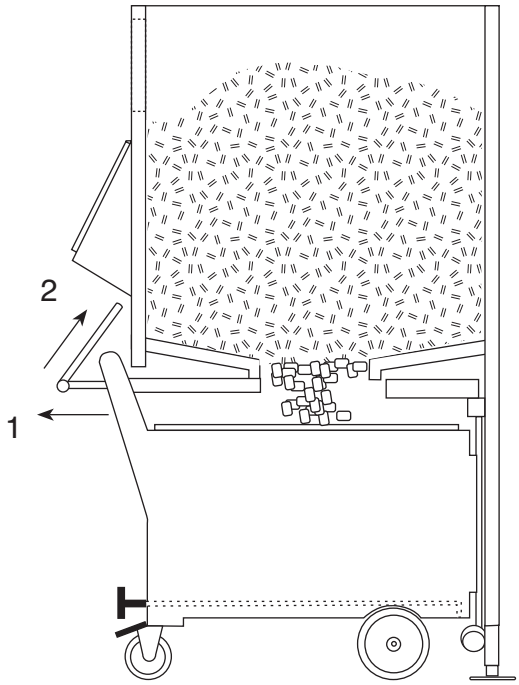

C

Pulling cart out

1. PUSH shutter handle closed.

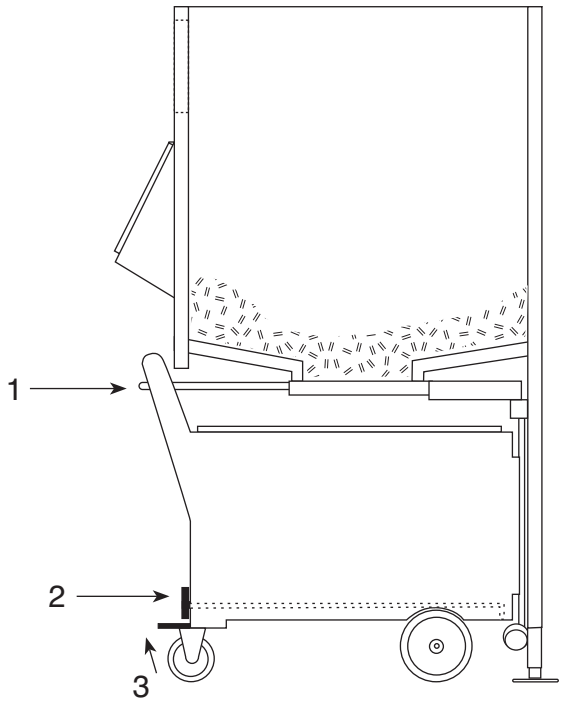

D

Transporting ice

1. PULL cart from base.

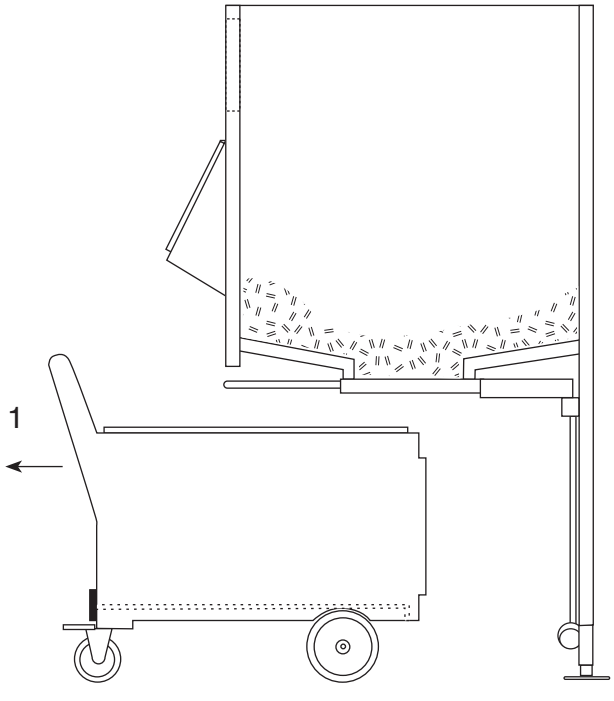

Breaking ice bridges

It may be necessary to use the paddle to break up ice bridges that occur along the sides and in the middle of the bin. This often happens if ice has been held in storage for a period of time without use.

Use supplied paddle accessory to break up bridges

Do NOT dig up at ice. Instead, break away "legs" that are holding bridges. Ice above will then fall.

To avoid injury, do not attempt to break up bridged ice through upper windows or hopper shutter door. A falling ice bridge can cause paddle to lift. Keep head and face away from paddle handle to avoid injury.

1. Completely knock down all ice from sides and back of bin.
2. Knock down any bridge that has occurred in middle.
3. Agitate paddle back and forth to break up congealed ice mass.

Fig. 6

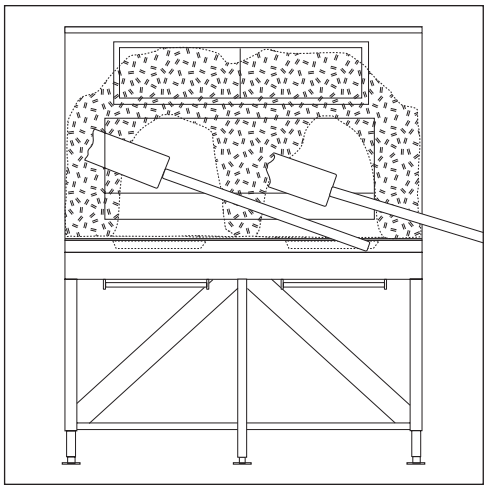

Fig. 7

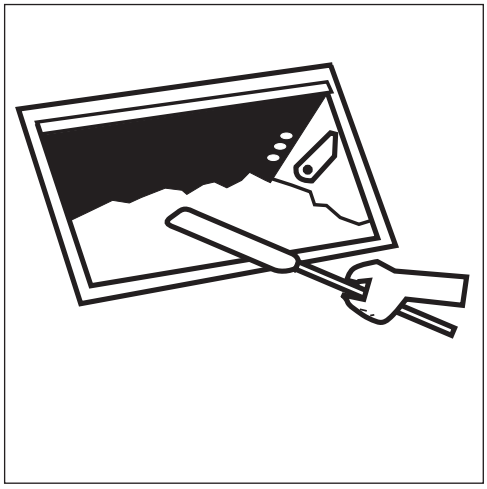

SmartGATE operation

SmartGATE can be adjusted and locked at one of several levels to accommodate flow characteristics of different types of ice.

Bin is shipped with SmartGATE in full down position. SmartGATE can be raised and locked in higher position for better flow or when more access is needed.

Fig. 8

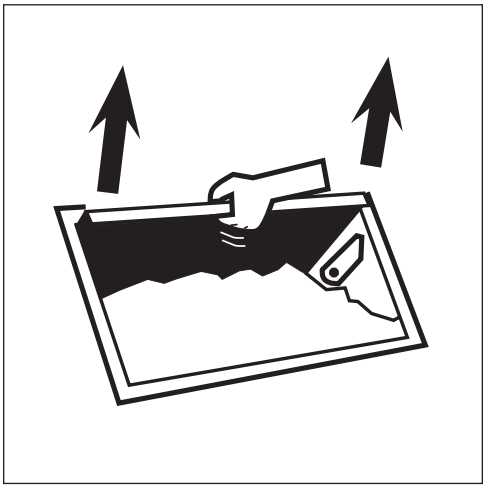

Cleaning

Clean and sanitize bin interior prior to use and on regular schedules as needed. Use non-chlorine based cleaner and sanitizer suitable for use in food zone. Do NOT use chlorine-based cleaners, which can cause staining and pitting of stainless steel components. Turn off icemakers(s) and remove ice from bin before beginning.

Bin drain system cleaning

1. Remove upper tray(s) and wash with cleaning solution, rinse and reposition in brackets.

Drain tray cleaning

1. Remove two thumbscrews on side of drain tray and pull drain tray forward to remove.
2. Wash with an approved cleaner.

Shutter doors and rails

1. Support hopper shutter door with one hand and remove thumbscrews from side of hopper shutter door at under side of base section.
2. Pivot door down to remove.
3. Wash door, rinse thoroughly and sanitize.
4. Remove thumbscrews holding front and rear of shutter tracks.
5. Wash tracks, rinse thoroughly and sanitize.

Cleaning bin before use and ongoing bin maintenance

Interior of bin must be cleaned and sanitized prior to use, and should be cleaned on routine basis during use.

Interior bin care

Follett ice storage bins with SmartGATE are equipped with polyethylene liner walls which should be cleaned and sanitized periodically with Ecolab Mikro-chlor Cleaner or any product suitable for use in a food zone.

Important: Follett Corporation recommends installing a properly-sized, activated carbon (charcoal) water filter on water supply to icemaker to remove chlorine.

1. Remove upper inspection windows by sliding windows to one side. Grasp the end of the front window and pull toward you as the window is slid to the opposite side. Repeat for rear window.



2. Wash bin walls, ice storage area, access door plate and partition (if any), rinse and sanitize.

Exterior bin care

Exterior stainless steel surfaces can be cleaned with a stainless steel cleaner such as 3M Stainless Steel Cleaner & Polish or equivalent.

Technical assistance available toll free

Should you have any questions concerning installation or maintenance of Follett ice storage bins, please call our technical service department at (800) 523-9361 or (610) 252-7301 between 8 a.m. and 5 p.m. Eastern time.

Replacement parts

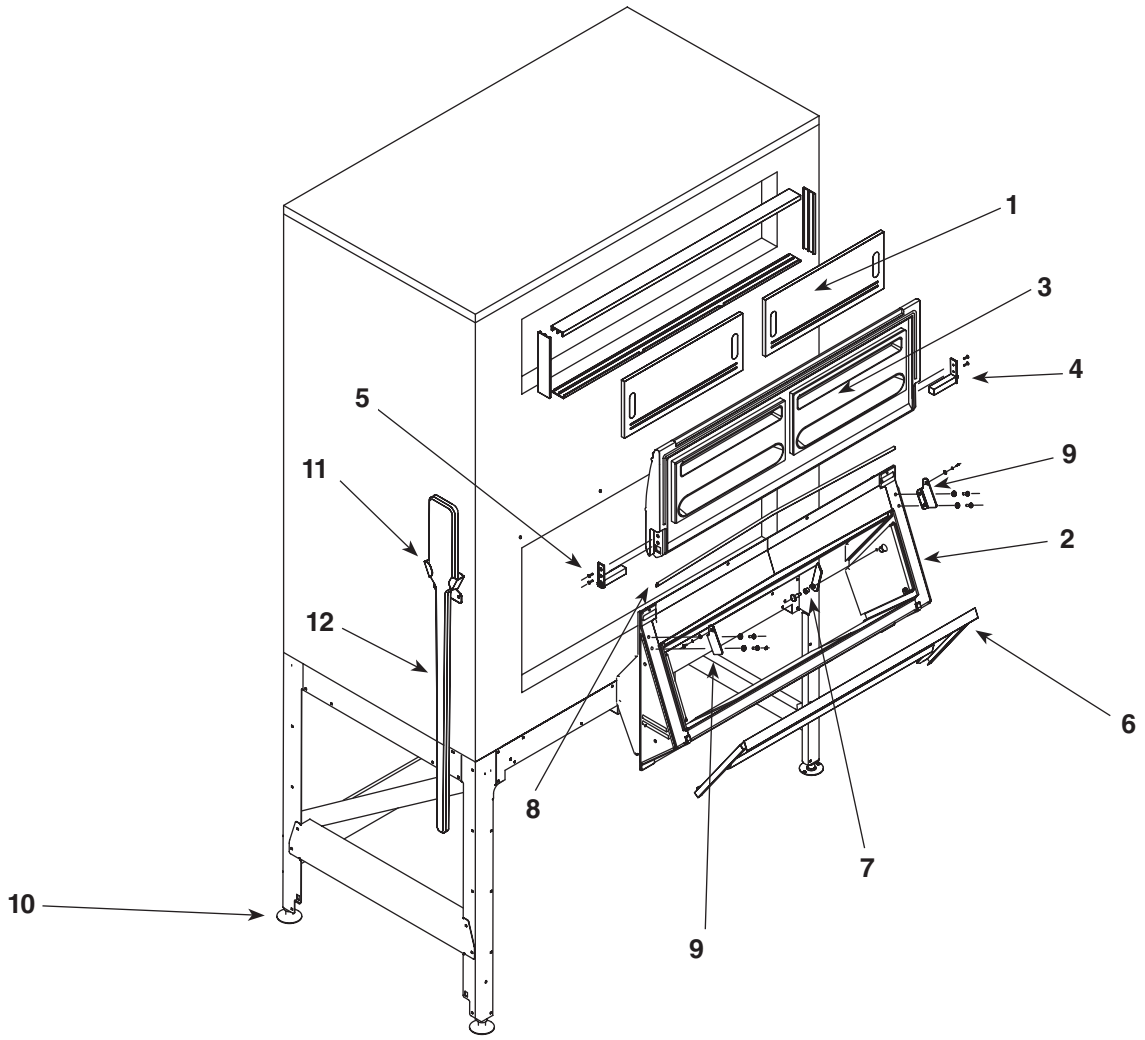

Reference #	Description	Part #
1	(2) Inspection window, 21.125"W x 8.625"H (2 used per bin) - 3200/2250	502237
2	Frame assembly, lower door, 45" (includes 502177 & 502182)	502361
3	Door, outer lift, 45" (includes 502178 & 502179)	502177
4	Hinge, RH door mount (includes hardware)	502179
5	Hinge, LH door mount (includes hardware)	502178
6	Ice Gate, 40", w/o holes	502182
7	Catch, Ice Gate	502185
8	Gasket, 41.5"	502364
9	Hinge bracket, bin mount, LH/RH, (pair, includes hardware)	502180
Not shown	Strap, hold down	502214
10	Foot, flanged (1), bolt base	502196
11	Bracket, ice paddle	502064
12	Paddle, ice	502063
Not shown	Shovel, ice	501796
Not shown	Bracket, ice shovel	502360

Drain system

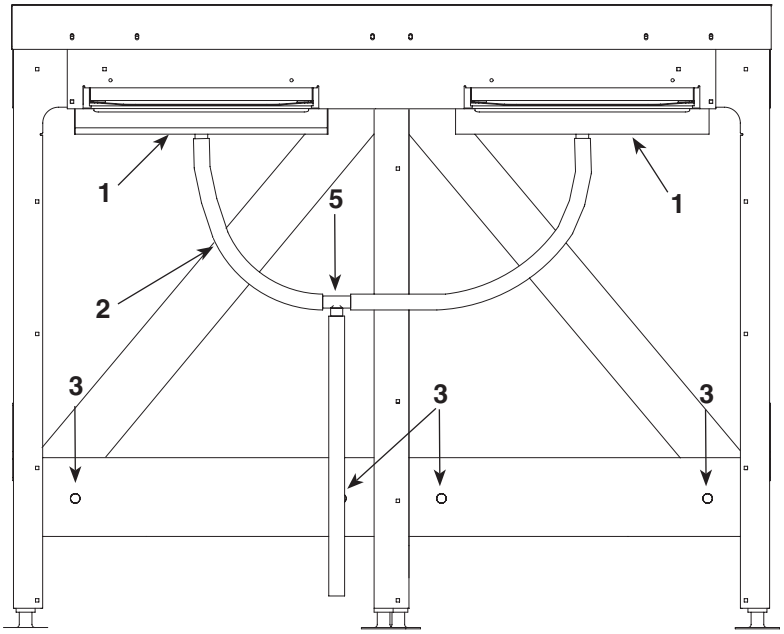

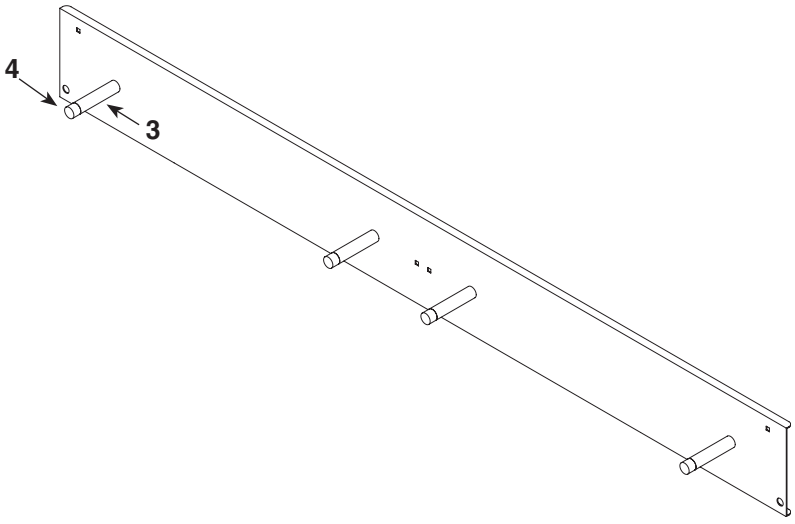

Reference #	Description	Part #
1	Drain pan upper – includes (2) 501100	00147652
2	Vertical drain tube – sold per foot	205149
3	Bumper, and stud – includes 502865	502849
4	Cap, bumper	502865
5	Tee	00147678

Shutter door assembly

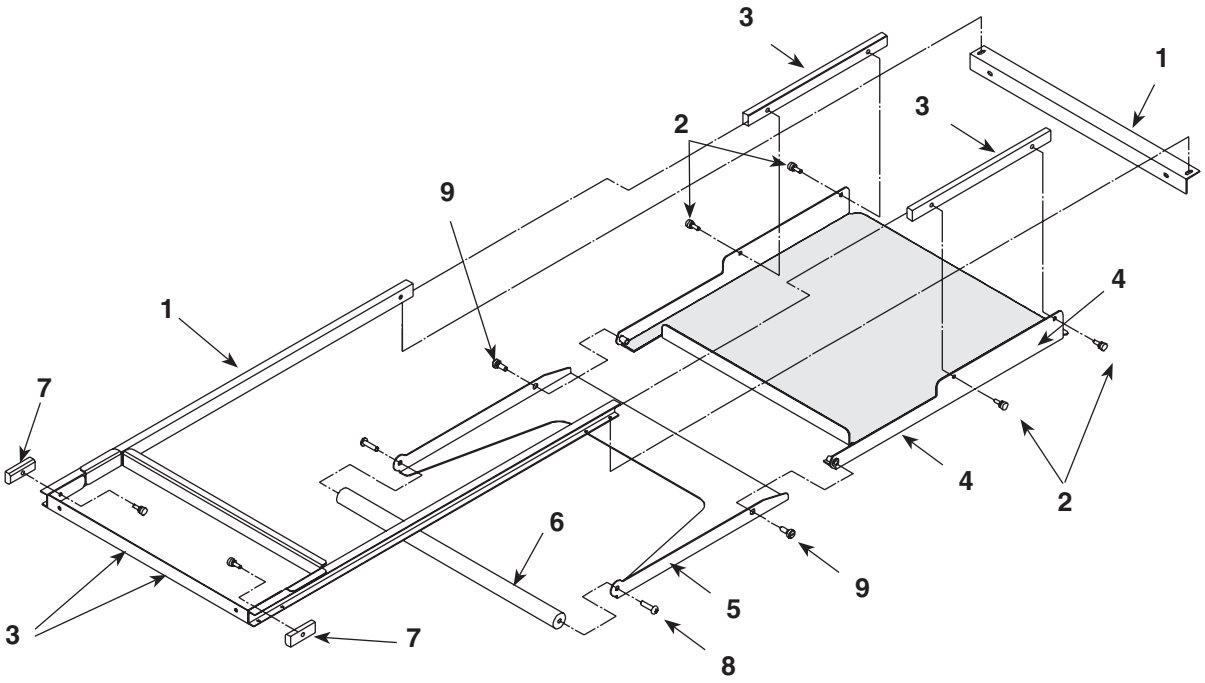

Multi-bay joint cover

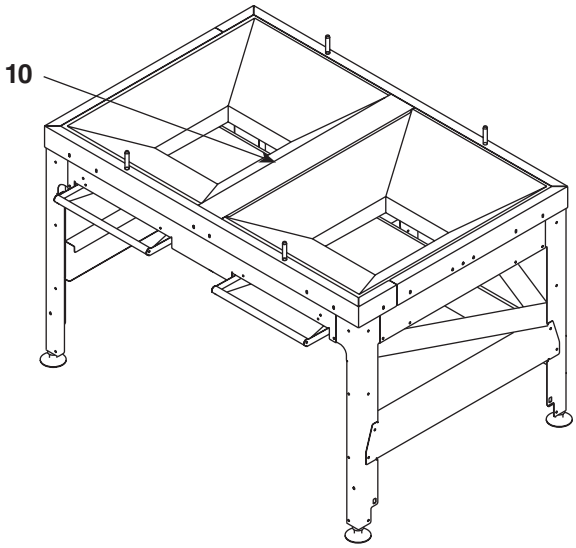

Reference #	Description	Part #
1	Track shutter door – includes (2) 502272, (8) 501100	502864
2	Thumbscrew, 10-32 X 1/2"	501100
3	Bearings (2), shutter door, nylon 11-7/16" – includes (4) 501100	502269
4	Shutter door – (includes 502857 and (2) 502272)	00147660
5	Assembly, handle, shutter door – includes 502858	502857
6	Rod handle, shutter door – includes (2)502859	502858
7	Spacer, bearing – includes 501100	502272
8	Screw, shutter handle rod	502859
9	Shoulder screw, handle shutter door	502860
10	Cover, joint, two and three bay, blue hopper	00112821
Not shown	Ice guide – includes (2) 501100	502861
Not shown	Bracket, ice guide – includes (2) 501100	502863

Rejestracja gwarancji i ocena sprzętu

Dziękujemy za zakup urządzenia firmy Follett. Mamy nadzieję, że nasze urządzenia spełniają i przekraczają Państwa oczekiwania, gdyż naszym celem jest dostarczenie klientom wysoce wartościowych produktów i usług, zasługujących na ich pełne uznanie.

Prosimy zapoznać się z załączoną instrukcją instalacji i obsługi. Istotne jest przeprowadzenie instalacji zgodnie z wymogami producenta, co zapewni działanie urządzenia z maksymalną wydajnością.

Follett LLC nie będzie ponosić odpowiedzialności za szkody wtórne, wydatki, koszty podłączania lub odłączania lub jakiekolwiek straty wynikające z wady urządzenia.

Aby uzyskać szczegółowe informacje na temat warunków gwarancji, prosimy odwiedzić naszą strone internetową www.follettice.com/productwarranties.

Rejestracja gwarancji i ocena urządzenia to istotne czynności, ułatwiające nam utrzymanie aktualnych danych o miejscach instalacji naszych urządzeń i o ich działaniu. Prosimy o zarejestrowanie gwarancji na nabyte urządzenie firmy Follett na naszej witrynie www.follettice.com/support, gdzie należy wybrać Warranty Registration (Rejestracja gwarancji) i Equipment Evaluation (Ocena urządzenia). Jest to łatwe i nieskomplikowane, prosimy o znalezienie na to paru minut jeszcze dzisiaj. Na formularzu jest również miejsce na przekazanie nam komentarzy i informacji zwrotnych. Proszę podzielić się z nami swoimi wrażeniami, abyśmy mogli wykorzystać je w naszych ciągłych dążeniach do usprawnień.

Jesteśmy dumni z naszych znakomitych urządzeń i staramy się usilnie wspierać je znakomitą obsługą klienta i wsparciem technicznym. Chcielibyśmy wiedzieć, w jaki jeszcze sposób moglibyśmy Państwu pomóc. Z przyjemnością odpowiemy na Państwa pytania.

Registro de Garantía y Evaluación del Equipo

Gracias por haber elegido este producto Follett®. Esperamos que nuestro equipo cumpla o supere sus expectativas porque es nuestro objetivo ofrecer productos y servicios de gran valor que se ganen su plena confianza.

Le rogamos consulte el manual de instalación y de instrucciones adjunto, ya que es muy importante que la instalación se realice según las especificaciones de fábrica para que el equipo funcione a su máxima eficiencia.

Follett LLC no se hace responsable de los daños indirectos, costos, gastos por conexión y desconexión o pérdidas por causa de defecto de la máquina.

Si desea una información más completa sobre la garantía, visite nuestro sitio web www.follettice.com/productwarranties.

Las operaciones de registro de la garantía y evaluación del equipo son importantes para que podamos realizar un seguimiento de nuestro equipo y registrar el rendimiento de la maquinaria. Por favor, registre las garantías del equipo Follett en nuestro sitio web www.follettice.com/support y seleccione Registro de la Garantía y Evaluación del Equipo. Es muy sencillo, solo le llevará un momento realizar hoy mismo el registro. En el formulario incluimos un espacio en blanco para sus comentarios y opiniones. Infórmenos sobre su experiencia para que podamos incorporarla a nuestros continuos esfuerzos de mejora.

Nos enorgullecemos de producir un equipo excepcional y trabajamos duro para respaldarlo con un soporte técnico y un servicio de atención al cliente de primera. Le rogamos nos indique qué más podemos hacer para ayudarle. Estaremos encantados de responder a sus dudas.

Enregistrement de la garantie et évaluation de l’équipement

Merci d’avoir acheté un équipement Follett®. Notre objectif étant d’offrir des produits et des services de grande valeur vous satisfaisant pleinement, nous espérons que celui-ci satisfera, voire dépassera, vos attentes !

Veuillez consulter le manuel d’installation et d’exploitation. Il est important que l’installation soit réalisée conformément aux spécifications de l’usine, de sorte que votre équipement fonctionne à son rendement maximum.

Follett LLC n’est pas responsable de tout dommage consécutif, de toute dépense, de tout frais de raccordement ou de déconnexion, ni de toute perte liée à un défaut de la machine.

Pour lire la garantie dans son ensemble, visitez notre site Internet www.follettice.com/productwarranties.

L’enregistrement de la garantie et l’évaluation de l’équipement sont importants pour nous aider à suivre notre équipement et pour enregistrer les performances de la machine. Nous vous demandons donc d’enregistrer la garantie de votre équipement Follett sur notre site Internet, www.follettice.com/support, dans la section Warranty Registration and Equipment Evaluation. Cette opération est simple ; veuillez prendre un moment pour la réaliser aujourd’hui.

Le formulaire contient également un espace pour nous faire parvenir vos commentaires et un retour d’informations. Veuillez nous faire part de votre expérience pour que nous puissions prendre appui dessus pour poursuivre nos efforts constants d’amélioration.

Nous sommes fiers de produire des équipements exceptionnels et nous travaillons avec acharnement pour y associer une assistance à la clientèle et technique exceptionnelle. N’hésitez pas à nous indiquer dans quelle mesure nous pouvons vous aider. Nous serions ravis de répondre à vos questions.

Garantieregistrierung und Produktbeurteilung

Vielen Dank, dass Sie sich für ein Follett®-Produkt entschieden haben. Wir hoffen, dass unser Produkt Ihre Erwartungen erfüllen oder sogar übertreffen wird, weil wir uns zum Ziel gesetzt haben, hochwertige Produkte und Leistungen anzubieten, die Ihre uneingeschränkte Anerkennung verdienen werden!

Lesen Sie sich bitte die beiliegende Installations- und Betriebsanleitung durch. Es ist wichtig, dass die Installation entsprechend den Werksangaben erfolgt, damit Ihr Produkt mit maximalem Wirkungsgrad arbeiten kann.

Follett LLC ist nicht für Folgeschäden, Ausgaben, Gebühren für Anschluss oder Abschaltung oder Verluste aufgrund eines Defekts der Maschine haftbar.

Vollständige Garantieinformationen finden Sie auf unserer Website unter www.follettice.com/productwarranties.

Garantieregistrierung und Produktbeurteilung sind wichtig, damit wir einen Überblick über unsere Produkte behalten und ihre Effizienz bewerten können. Wir möchten Sie bitten, Garantien für Follett-Produkte auf unserer Website www.follettice.com/support zu registrieren und den Punkt „Garantieregistrierung und Produktbeurteilung" zu wählen. Es ist ganz einfach. Nehmen Sie sich bitte einen Moment Zeit, um die Registrierung heute vorzunehmen. Auf dem Formular ist auch Platz für Kommentare und Feedback vorhanden. Teilen Sie uns bitte Ihre Erfahrungen mit unseren Produkten mit, damit wir sie für unsere fortlaufenden Produktverbesserungen verwenden können.

Wir sind stolz darauf, dass wir besondere Produkte herstellen, und wir bemühen uns, unsere Produkte mit besonderem Kundendienst zu unterstützen. Lassen Sie uns bitte wissen, was wir noch für Sie tun können. Wir werden Ihre Fragen gerne beantworten.

Registrazione della garanzia e valutazione dell'attrezzatura

Grazie per aver acquistato un dispositivo Follett®. Ci auguriamo che il nostro prodotto soddisfi o superi le Sue aspettative, in quanto il nostro obiettivo è quello di offrire prodotti e servizi di alta qualità che soddisfino pienamente le vostre esigenze!

La preghiamo di leggere attentamente il manuale per l'installazione e per l'uso allegato. È infatti importante che l'installazione sia effettuata secondo le specifiche di fabbrica in modo tale che il dispositivo operi con la massima efficienza.

La Follett LLC non si assume alcuna responsabilità per danni conseguenti, spese, costi di collegamento o scollegamento o eventuali perdite dovute ad un difetto della macchina.

Per visualizzare i dettagli completi relativi alla garanzia, recarsi alla pagina www.follettice.com/productwarranties.

La registrazione della garanzia e la valutazione dell'attrezzatura sono importanti per aiutarci a tenere traccia dei nostri dispositivi e a registrare le prestazioni della macchina. Le chiediamo dunque di registrare le garanzie relative al dispositivo Follett sul nostro sito Web alla pagina www.follettice.com/support scegliendo Registrazione della garanzia e Valutazione dell'attrezzatura. Farlo è semplice; dedichi pochi minuti a registrare il prodotto oggi stesso. Sul modulo è inoltre previsto uno spazio in cui potrà fornirci i Suoi commenti e il Suo riscontro. Ci faccia sapere della Sua esperienza in modo che possiamo farne tesoro per il nostro continuo miglioramento.

Siamo orgogliosi di produrre macchinari di ottima qualità e lavoriamo sodo per offrire un servizio di assistenza clienti e tecnico di qualità altrettanto elevata. Ci faccia sapere come possiamo esserle di aiuto. Saremo lieti di rispondere a tutte le Sue domande.

Registo da garantia e avaliação do equipamento

Obrigado por ter adquirido equipamento Follett®. Fazemos votos de que o nosso equipamento cumpra ou exceda as suas expectativas, dado que temos por objetivo fornecer produtos e serviços de elevado valor que mereçam a sua total satisfação!

Pedimos-lhe que leia o manual de instalação e operações em anexo. É importante que a instalação seja levada a cabo de acordo com as especificações da fábrica, para que o seu equipamento funcione com a eficiência máxima.

A Follett LLC não assume a responsabilidade por quaisquer prejuízos indiretos, despesas, custos de ligação ou desligação ou quaisquer outras perdas decorrentes de um defeito na máquina.

Para consultar os dados da garantia, visite o nosso website www.follettice.com/productwarranties.

O registo da garantia e a avaliação do equipamento são importantes para nos ajudar a estar a par do nosso equipamento e registar o desempenho da máquina. Pedimos-lhe que registe as garantias de equipamento Follett no nosso website www.follettice.com/support, em "Warranty Registration and Equipment Evaluation". É muito simples; tire uns minutos para fazer o registo hoje mesmo. O formulário inclui também espaço para os seus comentários e feedback. Conte-nos a sua experiência para que possamos usá-la nos nossos esforços contínuos de melhoria.

Temos muito orgulho em produzir equipamento excecional e empenhamo-nos em proporcionar um apoio técnico e um apoio ao cliente igualmente excecionais. Diga-nos o que mais podemos fazer para o ajudar. Teremos todo o prazer em responder às suas perguntas.

Registrering af garanti og evaluering af udstyr

Tak for dit køb af Follett ®-udstyr. Forhåbentlig synes du, at vores udstyr lever op til eller overstiger dine forventninger, for vores målsætning er at levere produkter og serviceydelser af høj kvalitet, som du er fuldstændig tilfreds med!

Gennemlæs venligst den vedlagte installations- og driftsmanual. Det er vigtigt at installationen udføres i henhold til fabriksspecifikationerne, så dit udstyr kan fungere med maksimal effektivitet.

Follett LLC hæfter ikke for følgeskader, udgifter, tilslutnings- eller frakoblingsomkostninger eller nogen form for tab, der skyldes en maskindefekt.

Du kan læse de fulde oplysninger om garantien på vores website www.follettice.com/productwarranties.

Registrering af garantien og evaluering af udstyret er vigtigt for at hjælpe os med at følge op på vores udstyr og registrere maskinens ydelse. Vi beder dig registrere garantier på Follett-udstyr på vores website www.follettice.com/support og vælge Warranty Registration and Equipment Evaluation (Registrering af garanti og evaluering af udstyr). Det er nemt at gøre, så vi beder dig bruge et øjeblik på at registrere dig i dag. Formularen har også plads til, at du kan give os kommentarer og feedback. Fortæl os om dine erfaringer, så vi kan bruge dem i vores fortsatte bestræbelser på at forbedre os.

Vi sætter en ære i at fremstille udstyr i særklasse og arbejder hårdt på at kunne bakke udstyret op med fremragende kundeservice og teknisk support. Fortæl os, hvad vi ellers kan gøre for at hjælpe dig. Vi svarer gerne på dine spørgsmål.

Registratie van garanties en beoordeling van apparatuur

Gefeliciteerd met uw aankoop van Follett®-apparatuur. We hopen dat onze apparatuur uw verwachtingen invult of zelfs overstijgt, omdat we ernaar streven om hoogwaardige producten en diensten te leveren die u uitermate tevreden stellen!

Lees de bijgevoegde installatie- en bedieningshandleiding zorgvuldig door. Het is belangrijk dat de installatie uitgevoerd wordt volgens de fabrieksspecificaties, zodat uw apparatuur zo efficiënt mogelijk werkt.

Follett LLC is niet aansprakelijk voor enige gevolgschade, uitgaven, montage- of demontagekosten of enige door een defect van de machine geleden verliezen.

Bezoek onze website www.follettice.com/productwarranties voor alle garantiegegevens.

De registratie van garanties en de beoordeling van apparatuur is belangrijk voor ons om onze apparatuur te helpen traceren en de prestaties van de machine te registreren. We verzoeken u dan ook om garanties van Follett-uitrusting te registreren op onze website www.follettice.com/support en om "Warranty Registration" (Registratie van garanties) en "Equipment Evaluation" (Beoordeling van apparatuur) te kiezen. Gelieve hier even tijd voor vrij te maken. Het is namelijk zeer eenvoudig. Er is op het formulier ook plaats om opmerkingen en feedback te geven. Breng ons gerust op de hoogte over uw ervaring met onze apparatuur, zodat we ons kunnen blijven verbeteren.

We zijn trots op onze productie van uitstekende apparatuur en werken hard om dit bij te staan door een voortreffelijke klantendienst en technische ondersteuning. Aarzel echter niet om enige andere bijstand te vragen. We zullen uw vragen met plezier beantwoorden.

Garantiregistrering och utvärdering av utrustning

Tack för att du köpt utrustning från Follett®. Vi hoppas att du ska tycka att den uppfyller eller överträffar dina förväntningar, då vårt mål är att leverera produkter och tjänster av högt värde som gör dig helt nöjd!

Studera medföljande installations- och bruksanvisning. Det är viktigt att installationen genomförs enligt fabrikens anvisningar så att din utrustning arbetar med högsta effektivitet.

Follett LLC ansvarar inte för följdskador, kostnader, avgifter eller förluster som orsakats av fel på maskinen.

Fullständiga garantivillkor finns på vår hemsida www.follettice.com/productwarranties.

Garantiregistrering och utvärdering av utrustning är viktig för oss så att vi kan följa upp vär ultrustning och dess funktion. Vi vill att du registrerar Folletts utrustningsgaranti på vår hemsida www.follettice.com/support, där du väljer Garantiregistrering och produktutvärdering. Det är enkelt att göra, så ta dig tid en minut och registrera dig idag. Det finns också utrymme på blanketten för kommentarer och synpunkter. Berätta för oss vad du tycker så att vi kan använda det i våra ansträngningar att alltid bli bättre.

Vi är stolta över att producera överlägsen utrustning och vi arbetar hårt med att stötta den med överlägset kundansvar och tekniskt stöd. Tala om för oss vad vi kan göra mer för att hjälpa dig. Vi svarar gärna på dina frågor.

Warranty Registration and Equipment Evaluation

Thank you for purchasing Follett® equipment. We hope you find that our equipment meets or exceeds your expectations, as our goal is to deliver high value products and services that earn your complete satisfaction!

Please review the enclosed installation and operations manual. It is important that the installation be performed to factory specifications, so your equipment operates to its maximum efficiency.

Follett LLC will not be liable for any consequential damages, expenses, connecting or disconnecting charges or any losses resulting from a defect of the machine.

For full warranty details, visit our website www.follettice.com/productwarranties.

Warranty registration and equipment evaluation is important to help us keep track of our equipment and to record the machine's performance. We request that you register Follett equipment warranties on our website www.follettice.com/support and choose Warranty Registration and Equipment Evaluation. It's simple to do; please take a moment to register today. There is also space on the form to provide us with comments and feedback. Please let us know about your experience so we can capture it for our continuous improvement efforts.

We pride ourselves on producing outstanding equipment and we work hard to back it up with outstanding customer and technical support. Please let us know what else we can do to assist you. We would be happy to answer your questions.

SmartGATE is a registered trademark of Follett Corporation, registered in the US.

FOLLETT®
Innovative solutions, inspired by ice

801 Church Lane • Easton, PA 18040, USA
Toll free (877) 612-5086 • +1 (610) 252-7301
www.follettice.com

00147694R02
© Follett LLC 4/18