FOLLETT CORPORATION

Ice Storage and Transport Systems

Installation, Operation and Parts Manual

Poly Carts with Service Number 88158 and above
Transport Systems with Service Number 59201 and above

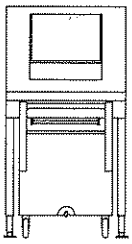

ITS500-31

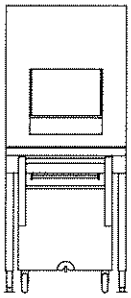

ITS700-31

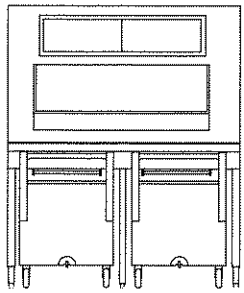

ITS1350-60

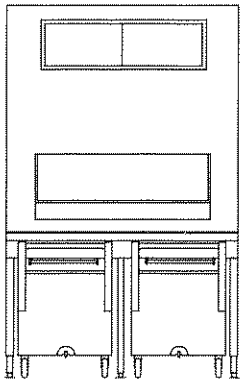

ITS2250-60

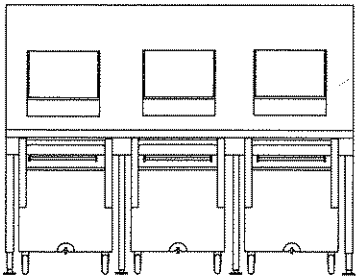

ITS1700-90

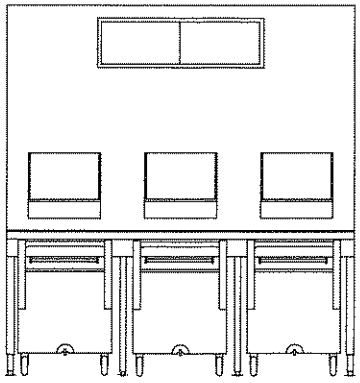

ITS3250-90

After installing system, please forward manual to operator.

FOLLETT CORPORATION
801 Church Lane • P.O. Box D, Easton, PA 18044
Toll-free (800) 523-9361 • (888) 2-FOLLETT
(610) 252-7301 • FAX (610) 250-0696

205946
10/98

Welcome to Follett

Follett Ice Storage and Transport Systems enjoy a well-deserved reputation for excellent performance and long-term reliability. To ensure that your equipment delivers this same degree of service, please read this manual carefully before installing or operating the system. If you have questions during installation or operation of this system, please call our technical service group toll-free at (800) 523-9361 or (888) 2-FOLLETT, or direct at (610) 252-7301.

Before you begin - After uncrating, remove all packing material and inspect equipment for shipping damage. If damage is found, notify shipper immediately and contact Follett so that we can help in filing a claim, if necessary.

Important cautions and operating rules

Read this manual completely before assembling or operating Ice Transport System and follow cautions and instructions listed below.

To avoid damage to Ice Transport System and injury during operation:

- Do not move Ice Transport System once icemaker has been installed.
- Anchor flanged feet to floor as instructed on page 2.
- Use only paddle provided to assist ice flow.
- Use cart only to transport ice and reinstall carefully in bin bay when not in use.

To avoid injury during operation of unit:

- Keep entire body clear of bin when breaking up ice.
- Keep head and face away from paddle handle when breaking up ice.
- Lock caster before scooping or shoveling ice from cart and when parked in bay.
- Keep floor around Ice Transport System free of ice and water.
- Always operate cart at a slow, reasonable speed.

For best operation and to ensure delivery of clean, sanitary ice:

- Be sure bin system is level in both directions to provide proper drainage.
- Position cart in bay before opening hopper door.
- Install charcoal water filter on inlet water for icemaker.
- Hang paddle implement in supplied bracket after each use.
- Keep paddle clean and in good repair to avoid ice contamination.
- Cover ice with cart lid when transporting.
- Follow instructions in this manual for bin and cart cleaning and maintenance.
- Drain melt water from cart when positioned in bay by opening drain valve.
- Keep glass, dirt and other foreign objects out of bin and cart at all times.

Uncrating cart

1. Remove paddle from skid by cutting plastic straps.
2. Cut strap holding front axle to skid.
3. Remove wheel chocks from skid at handle end of cart.
4. Roll cart(s) out of base section.
5. Remove tape holding lid to cart.
6. Remove lid storage bracket(s) from inside cart. (Brackets may be installed on left or right side of bin. See Installing Bin section, following page.)

Uncrating and installing base section

1. Remove screws holding flanged feet and tie-down straps to skid and remove skid.
2. Remove packing material from inside of legs and around shutter door.
3. Position base in intended position and adjust feet to level unit in both directions.
4. Mark position of each flanged foot anchoring hole.
5. Move base out of way and install anchors for 1/4" bolts in floor.
6. Reposition unit in intended position.
7. Anchor base unit to floor through flanged feet.

When leveling, do not extend any leg more than .75" (1.9 cm) for total leg height no greater than 7.25" (18.4 cm).

Legs must be secured to floor through feet to avoid possible movement and resulting injury.

Installing bin

1. Remove 4 bolts fastening skid to underside of bin.
2. Remove all protective wrap from exterior.
3. Run 1/8" bead of supplied silastic in center of each band of gasketing on base.
4. Install bin section on base section, taking care that locating pins in base engage holes in bin.
5. Use fasteners provided to install paddle support bracket on right or left side of bin in holes provided.
6. Remove paper from back of cart lid storage bracket(s) and position brackets on side of bin.

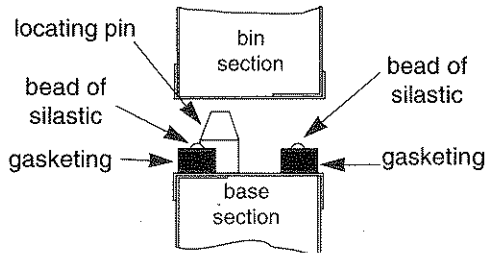

7. Remove all tape and temporary fastenings from door assemblies and outside of bin.
8. Mount icemaker(s) on top of bin in accordance with icemaker manufacturer's instructions.
9. Install tie-down straps.

Installing tie-down straps

Tie-down straps to secure bin to base are provided on each side of unit. Straps MUST be installed to avoid possible injury should unit move.

1. Remove screw from rivnut on each side of bin section.
2. Rotate tie-down strap up until slot matches rivnut opening.
3. Reinstall screw in rivnut and tighten.

Sealing bin interior

The joint between base and bin sections must be sealed with silastic to prevent leakage and/or ice contamination and potential voiding of warranty.

1. Support shutter door with one hand and remove thumbscrews from side of shutter door at underside of base.
2. Pivot door downward to remove.
3. Gain access through this opening and seal entire perimeter of seam between bin and base with provided sealant or equivalent.
4. After sealant has set but before shutter door has been reinstalled, clean inside of bin following instructions in this manual.
5. Reinstall shutter door.

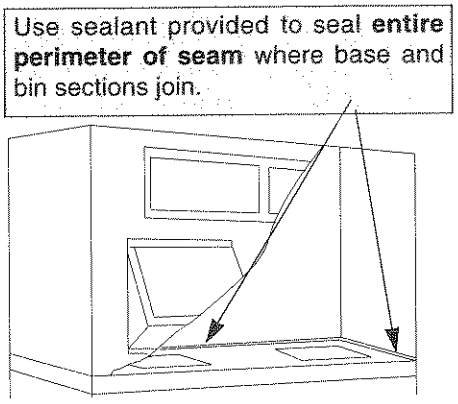

Cross Section of ITS Sections Joined

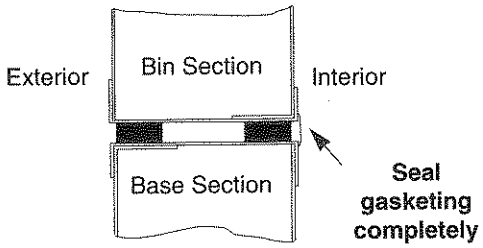

Plumbing connections

It is recommended that a full width grated floor drain be installed in front of bin.

1. Units are shipped for a right side exiting drain. To drain to left, remove lower drain trough, switch positions of left and right hand lower trough brackets and reinstall lower trough.
2. Connect drain line to 1" MPT drain fitting.
3. Make final connections to icemaker.

Affixing operating labels

Operating labels taped to base front educate staff to shutter door operation. If desired, these labels can be affixed **permanently** by peeling off back paper and affixing them in locations desired. **Note: Adhesive backing is extremely strong and labels cannot be easily removed once installed.**

Removing door assembly (for access through narrow door)

Door assemblies can be removed for access through a narrow door.

1. Remove shoulder screws A on each side of lift door and remove door.
2. Remove screws B in drip hood at top of assembly.
3. On two and three bay models, place a numbered piece of tape on each door assembly and bin face above it to ensure that each assembly is reinstalled in its original opening.
4. Cut all silastic seals: top and bottom seals inside bin, left and right side seals inside assembly itself, and left and right side seals on outside of assembly.
5. Pull top of assembly slightly forward to clear, and lift assembly up and out.

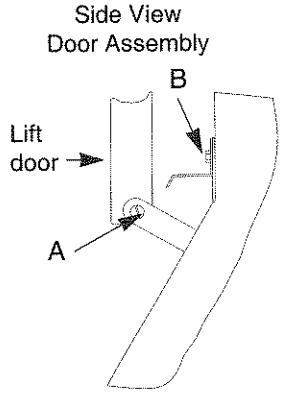

Reinstalling door assembly

Care must be taken when reinstalling door assembly to avoid leaks.

1. Refit lower door assembly in front of bin, lining up screw holes in assembly and bin front.
2. Reposition screws B loosely in drip hood before tightening any, then tighten.
3. Clean and dry all joints and apply bead of supplied sealant or equivalent to joints, making each bead large enough to close gaps, offsets or recesses, and ensure watertight seam.
4. Allow sealant to cure per manufacturer's instructions, usually 12 hours.
5. Reinstall outer lift door.

Ice guide adjustment

Some ice types are very "slippery" and may flow over sides of cart when exiting hopper. Ice guides hang down below hopper and help contain flowing ice inside cart.

Guides are installed in highest position at factory, providing 3/4" clearance to top of cart when legs are in full down position. If legs are adjusted up during leveling of Ice Transport System, ice guides should be lowered to maintain 3/4" (1.9cm) clearance. Access to sides of Ice Transport System is required to perform operation.

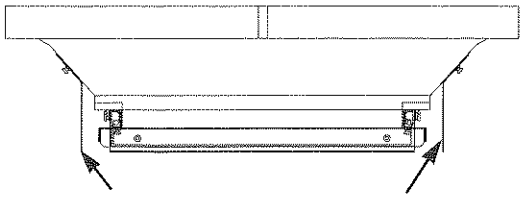

Brackets on underside of hopper to which ice guides are secured

To reposition ice guides after legs have been adjusted:

1. Position cart (with totes, if so equipped) in bay below shutter door opening.
2. Determine amount guides must be lowered to maintain 3/4" (1.9cm) clearance.
3. Remove thumbscrews holding guides.
4. Select hole to reposition guide at proper level and resecure with thumbscrew.
5. Repeat process for each bay in system.

Cart drain operation

1. Position cart all the way in bay.
2. Lock caster to prevent cart movement.
3. To open drain, pull knob out.
4. To close, push knob in.



Cart lids

1. Hang cart lids on brackets on bin side when carts positioned in bay.
2. Remove from bracket and place lid on cart when transporting ice.
3. To avoid placing lid on floor, position lid horizontally on cart lip, resting lid against cart handle when unloading ice from cart.
4. Reinstall lid in bracket on side of bin before placing cart in bay.

Ice Transport System operation

1 Pushing cart into bay

1. PUSH cart all the way to back.
2. PULL cart drain open.
3. Lock brake on caster DOWN.

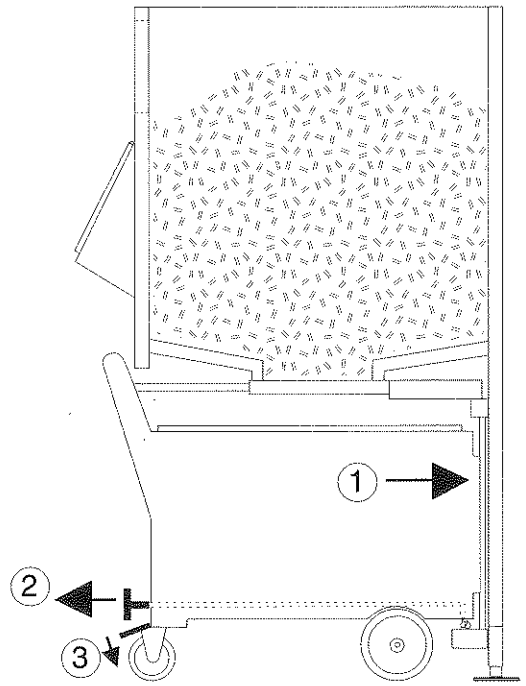

2 loading ice

1. PULL shutter handle open.
2. Store handle up against bin.

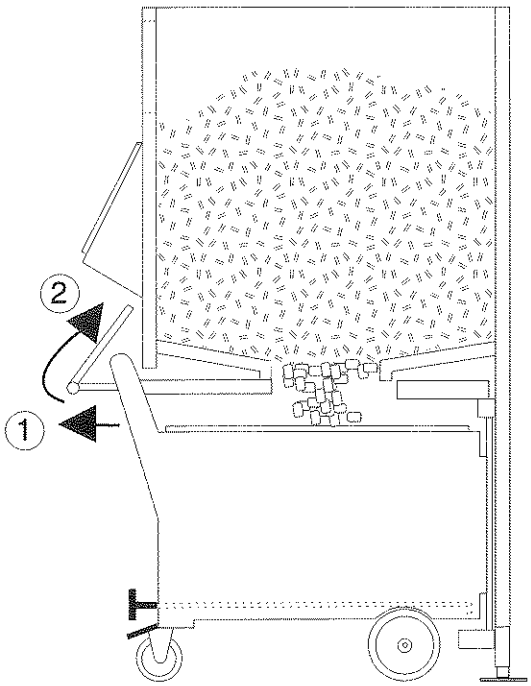

3 Pulling cart out

1. PUSH shutter handle closed.
2. PUSH cart drain closed.
3. Release brake on caster.

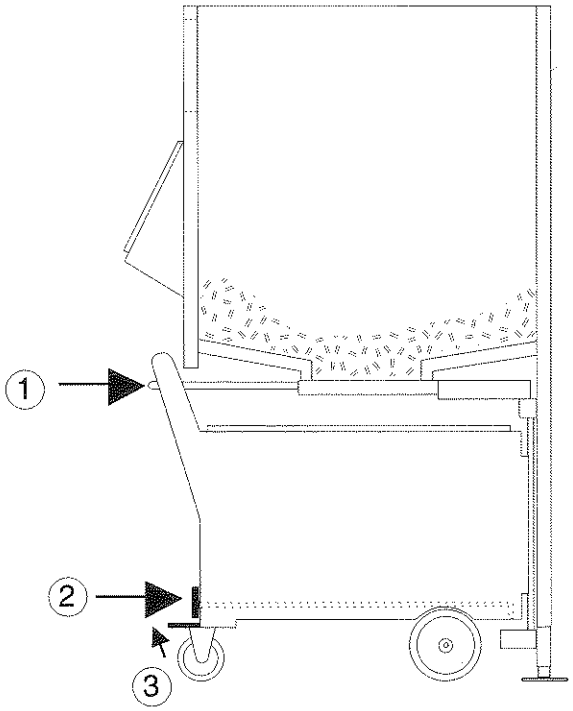

4 Transporting ice

1. PULL cart from base.
2. Place lid on cart.

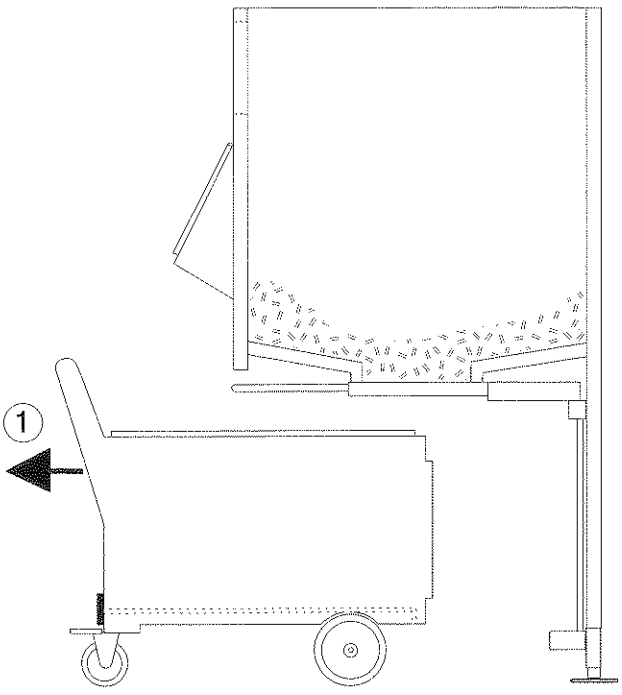

Breaking ice bridges

It may be necessary to use the paddle to break up ice bridges that occur along the sides and in the middle of the bin. This often happens if ice has been held in storage for a period of time without use.

Use supplied paddle accessory to break up bridges (see caution below):

1. Completely knock down all ice from sides and back of bin.
2. Knock down any bridge that has occurred in middle.

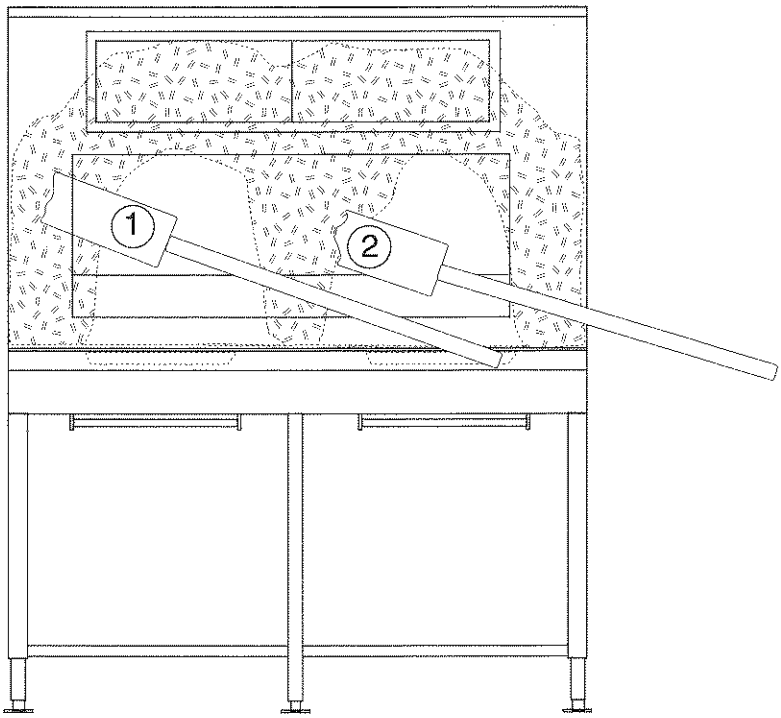

Do NOT dig up at ice. Instead, break away "legs" that are holding bridges. Ice above will then fall.

To avoid injury, do not attempt to break up bridged ice through upper windows or hopper shutter door. A falling ice bridge can cause paddle to lift. Keep head and face away from paddle handle to avoid injury.

Cleaning instructions

Clean and sanitize bin and cart(s) interiors prior to use and on regular schedule as needed thereafter. Use non-chlorine based cleaner and sanitizer suitable for use in a food zone. Do NOT use chlorine-based cleaners, which can cause staining and pitting of stainless steel components. Turn off icemaker(s) and remove ice from bin before beginning.

Bin drain system cleaning

1. Remove upper tray(s) and lower drain trough(s), wash with cleaning solution, rinse and reposition in brackets.
2. Saturate a cloth with cleaning solution and insert through a loop in end of a piece of wire.
3. Feed wire through vertical drain tube, and pull wire and cloth through tube.

Drain tray cleaning

1. Remove two thumbscrews on side of drain tray and pull drain tray forward to remove.
2. Wash with an approved cleaner.

Shutter doors and rails

1. Support hopper shutter door with one hand and remove thumbscrews from side of hopper shutter door at under side of base section.
2. Pivot door down to remove.
3. Wash door, rinse thoroughly and sanitize.
4. Remove thumbscrews holding front and rear of shutter tracks.
5. Wash tracks, rinse thoroughly and sanitize.

Interior of bin

1. Remove upper inspection windows by lifting and pulling forward.
2. Remove hopper shutter door (see above) to gain access to bin interior.
3. From inside bin, remove thumbscrews holding access door plate and remove plate.
4. Wash bin walls, hopper, access door plate and partition (if any), rinse and sanitize.

Cart and cart drain system

1. Wash cart liner with an approved cleaner, rinse and sanitize.

Chlorine staining of stainless steel interior bin walls

The bin liner material for Follett Ice Storage and Transport Systems may be polyethylene or stainless, depending on model of bin selected. Stainless steel liners may require periodic special cleaning to remove brown staining that can result from chemicals such as chlorine present in water supply.

Brown stains will most often appear at top of bin walls and should be removed immediately to avoid deterioration of metal. Lower portions of walls will usually stay clean because of washing action of melt water. To prevent pitting of stainless steel, bin liner walls should be cleaned **every three to six months**, with more frequent cleaning required in areas with heavily chlorinated water.

IMPORTANT NOTE: Staining of stainless liners can be significantly reduced by installing a properly sized activated carbon water filter on icemaker.

General Cleaning

When staining is light, it can usually be removed by washing with an ordinary cleaning powder, such as Bon-Ami or Copper-Glo, and water. **Do not use cleaners that contain bleaching agents, since most of these compounds contain chlorine.** After cleaning, rinse thoroughly with clear water. It may be necessary to use a **stainless steel wool** to remove bad stains. **Do NOT use plain steel wool.** Steel particles will become imbedded in liner and cause more serious staining.

Cleaning of heavy deposits

If liner has not been cleaned for a long time and heavy deposits or pitting have occurred, a chemical cleaner may be necessary. Follow instructions printed on cleaner container. Further information can be obtained from Follett Corporation, Technical Service Department, (800) 523-9361 or (888) 2-FOLLETT.

Replacement parts

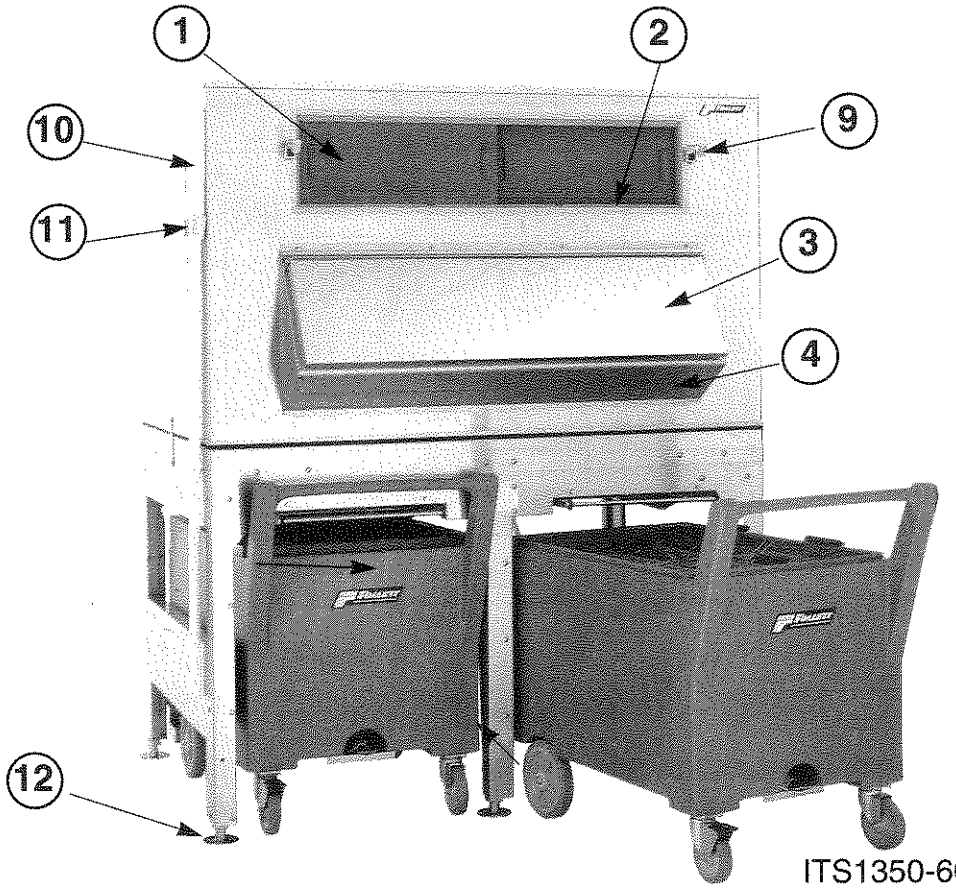

ITS1350-60 shown

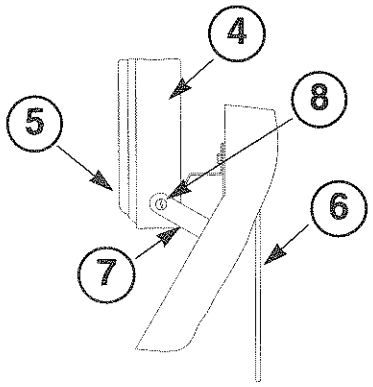

Lift door side view cutaway

Ref. No.	Description	Part No.
1	Inspection window, poly (ITS1350 & ITS2250), 2 req'd	502237
1	Inspection window, poly (ITS3250), 2 req'd	502237
2	Track assembly, inspection window (ITS1350 & ITS2250)	501277
2	Track assembly, inspection window (ITS3250)	501303
3	Lift door (17.75") – ITS500, ITS700, ITS1700, ITS3250	501716
3	Lift door (44.25") – ITS1350, ITS2250	501900
4	Door frame assembly, 17.75" door – includes 501716	501717
4	Door frame assembly, 44.25" door – includes 501900	501901
5	Gasket, 17.75" door	501718
5	Gasket, 44.25" door	501903
6	Baffle, 17.75" door – includes 500915	501771
6	Baffle, 44.25" door – includes 500915	501902
Not shown	Thumbscrew (1), baffle	500915
7	Hinges (2) – all lift doors	501223
8	Pin, hinge – all lift doors	501222
9	Catch – all lift doors	501211
10	Paddle	502290
11	Bracket, paddle	502325
12	Legs, flanged, stainless (set of 4)	501300
Not shown	Flanged foot (1), bolt base	502196
Not shown	Shoulder screw, shutter door handle	502229
Not shown	Straps, hold-down	502214

Drain system

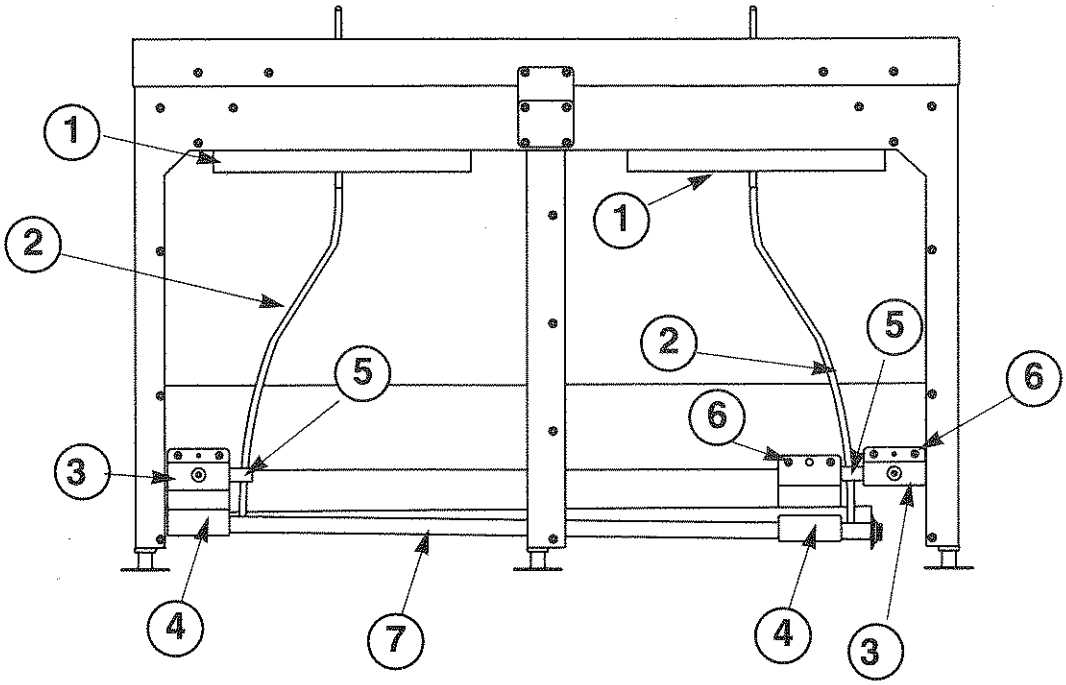

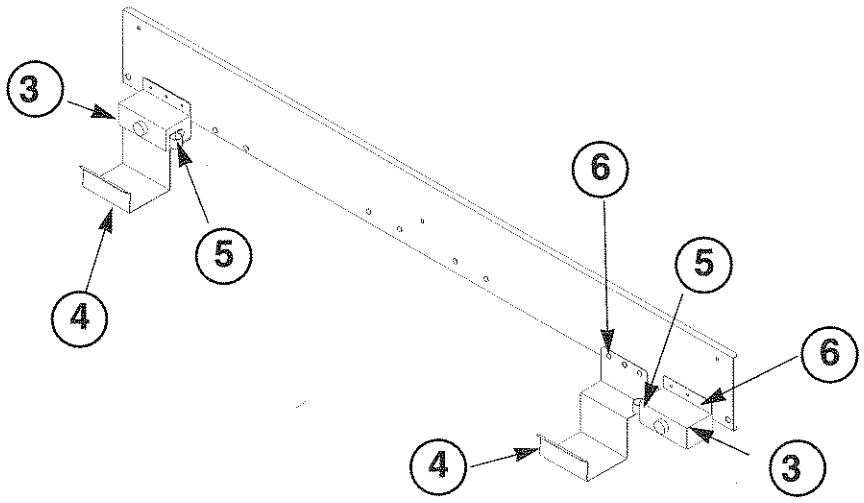

Ref. No.	Description	Part No.
1	Drain pan – includes (2) 501100	502273
2	Tube, vertical drain	502276
3	Bumper – includes (1) 502286, (2) 502287	502274
4	Bracket, lower drain trough – includes (2) 502287	502275
5	Clamp, vertical drain tube – includes (1) 501100	502286
6	Screw, 1/2" 10-32	500287
7	Drain trough (ITS500, ITS700)	501895
7	Drain trough (ITS1350, ITS2250)	501896
7	Drain trough (ITS1700, ITS3250)	501897
Not shown	Thumbscrew (1)	501100
Not shown	Sealant, 5 oz tube	500727

Shutter door assembly

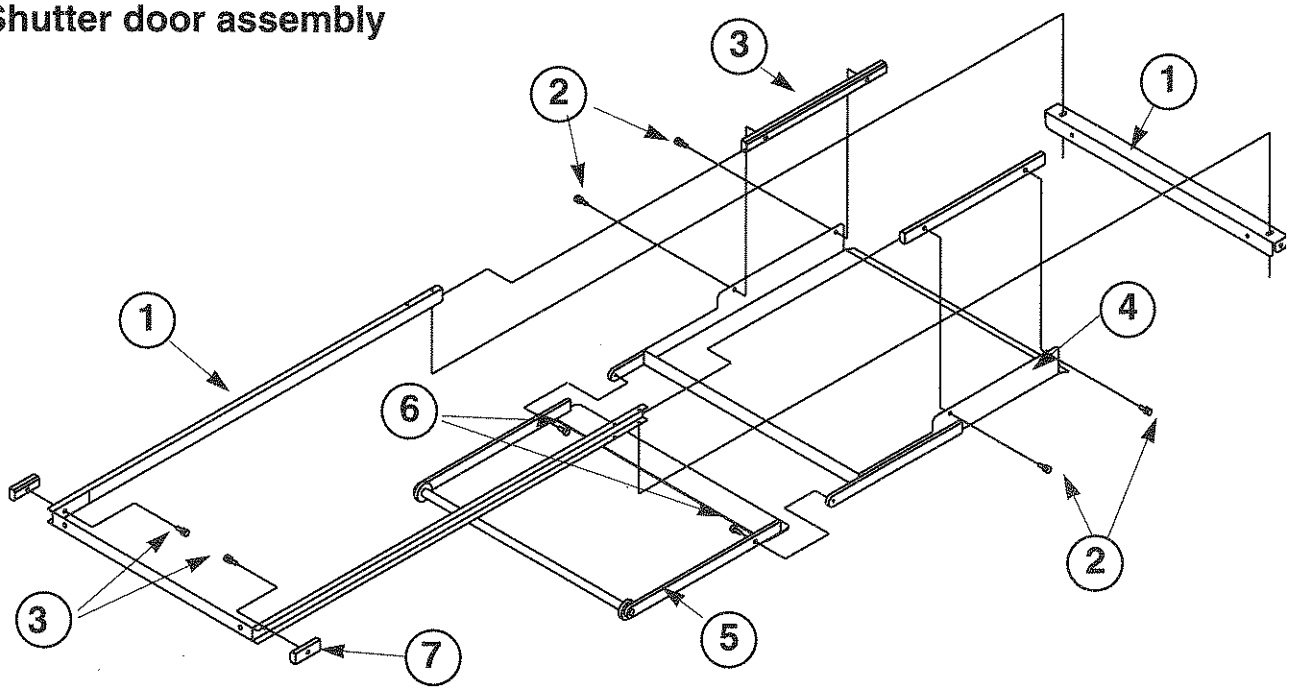

Ref. No.	Description	Part No.
1	Track assembly – includes (2) 502272, (4) 501100	502121
2	Thumbscrew (1)	501100
3	Bearing, shutter door, nylon – includes (2) 501100	502269
4	Door assembly, shutter	502271
5	Handle, shutter – includes (2) 502229	502270
6	Shoulder screw (1), shutter handle	502229
7	Spacer, bearing – includes (1) 501100	502272
Not shown	Ice guide, left – includes (2) 501100	502277
Not shown	Ice guide, right – includes (2) 501100	502278
Not shown	Bracket, ice guide – includes (2) 501100 (see page 4)	502280

Multi-bay joint cover

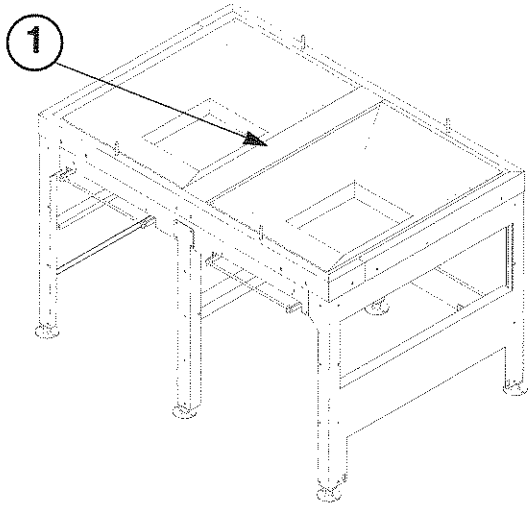

Ref. No.	Description	Part No.
1	Cover, joint – two and three bay models only	502279

Cart

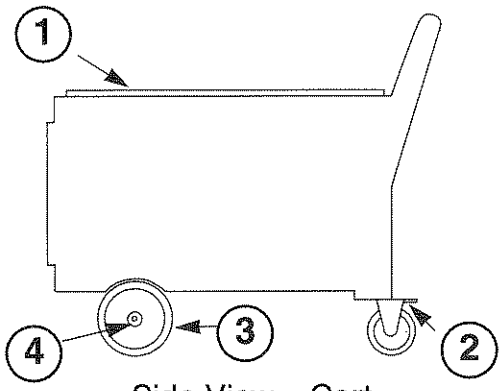

Side View – Cart

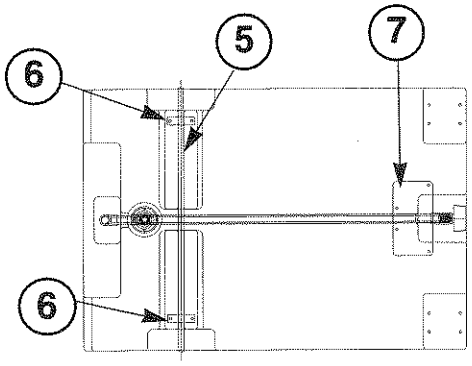

Bottom View – Cart

Ref. No.	Description	Part No.
1	Lid	501744
Not shown	Caster, swivel (includes mounting bolts and lock washers)	501719
2	Caster, swivel, locking (includes mounting bolts and lock washers)	501720
3	Wheel, 8", fixed (includes 2 cotter pins and 2 washers)	502025
4	Push cap, axle - OBSOLETE - order part # 502332	
5	Axle (includes 2 cotter pins and 4 washers)	502332
Not shown	Lockwasher	501719
6	Strap, axle	502028
7	Plate, drain support	502061
Not shown	Drain tray, tote	502304
Not shown	Bracket, lid holder	502055
Not shown	Ice removal Tote (1)	501919
Not shown	Handle, Tote	502097
Not shown	Washer, Axle	502210
Not shown	Cotter Pin	502343

Cart drain

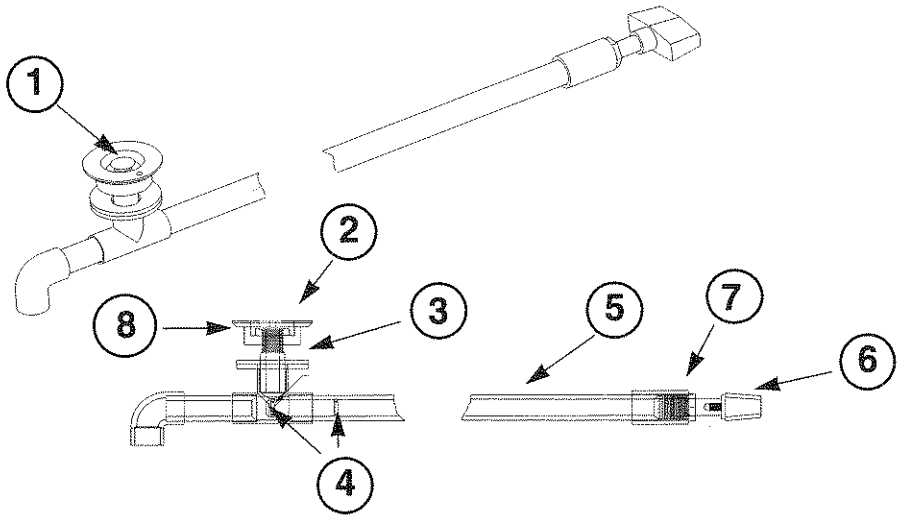

	Drain assembly (includes entire assembly shown)	502021
1	Vent plug	502106
2	Drain flange	502103
3	Washer, 7/8"	502104
4	O-ring, drain assembly	502022
5	Rod, drain (includes 502061 plate drain support)	502217
6	Knob, drain	502029
7	Retaining bushing	502289
8	Fitting, drain assembly	501743