Project _____

AIA # _____ SIS # _____

Item # _____ Quantity _____ C.S.I. Section 114000

R Series

76" Wide Pass-Thru Refrigerator
Glass Door, 32" Deep, Self-Contained

Models listed to the applicable UL, CSA and NSF standards by an approved NRTL. Consult the factory or unit data plate for additional information.

AVAILABLE CONFIGURATIONS

R Series Models	Door(s)
RHT332NPUT-HHG	Half Height Glass
RHT332NPUT-FHG	Full Height Glass

STANDARD PRODUCT FEATURES

- Stainless Steel Exterior & Interior
- Variable Speed Compressor Adapts to Specific Work Environment
- Traulsen's Smart Control™ with LED Display
- StayClear™ Condenser Coil
- Balanced, Self-Contained Refrigeration System Using R-290
- Rear Biased Return Air Duct
- Full or Half-Height Glass Doors with Locks
- Self-Closing Doors with Stay Open Feature
- Stainless Steel Vertical Door Handles
- Standard Door Hinging F & R: 332NP = Left/Right/Right (other hingings available)
- LED Lights with Exterior Switch
- Stainless Steel Breaker Caps
- Three Adjustable, Coated Wire Shelves Per Section, Supported on Shelf Pins (factory-installed)
- Automatic Non-Electric Condensate Evaporator
- Magnetic Snap-In EZ-Clean™ Door Gaskets
- Anti-Condensate Door Perimeter Heaters
- Thermostatic Expansion Valve Metering Device
- Stainless Steel One-Piece Louver Assembly
- 9' Cord & Plug Attached
- Set of (4) 6" High Adjustable Stainless Steel Legs

ACCESSORIES & OPTIONS

- SmartConnect™ App with WiFi Connectivity
- Accommodates EZ-Clean™ Tray Racks
- #1 Type Trayslides to Accommodate either (1) 18" x 26" or (2) 14" x 18" Sheet Pans, Adjustable to 2" O.C.
- #4 Type Trayslides to Accommodate 18 to 19 Levels for 18" x 26" Pans
- Universal Type Trayslides to Accommodate Either (1) 18" x 26" or (2) 14" x 18" Sheet Pans, or (2) 12" x 20" Steam Table Pans; (4) Pairs per Half Section
- Additional Coated Wire or Optional Stainless Steel Shelves
- Optional 208-230/115/60/1 or 208-230/60/1 Voltage
- Kool Klad™ Exterior Laminate Decor
- Set of (4) $4^{1}/_{8}$" or 6" High Casters in Lieu of Legs
- Other Support Options: $4^{1}/_{2}$" High Base or 6" High Kickplate (with standard legs)

- GUARANTEED FOR LIFE CAM-LIFT HINGES

*Remote application available, see form TR35837 for details.

ENERGY STAR® Listed Commercial Refrigerator
For full listing visit energystar.gov

Approved by_____ Date_____ Approved by_____ Date_____

R Series

76" Wide Pass-Thru Refrigerator
Glass Door, 32" Deep, Self-Contained

MODEL:

RHT332NPUT-HHG

CAD and/or Revit Files Available

https://traulsen.kclcad.com/

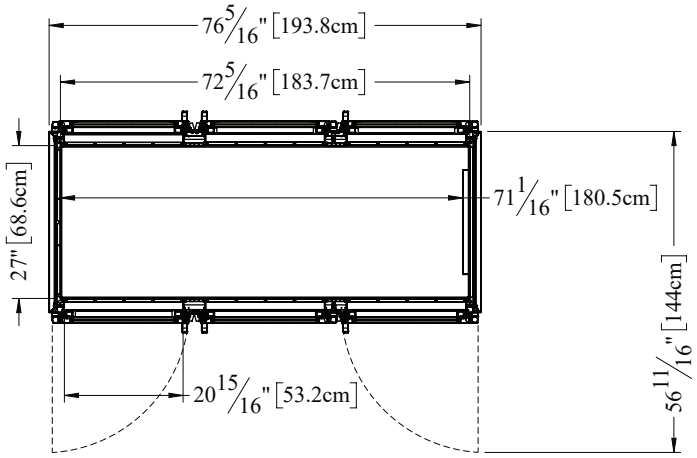

TOP VIEW

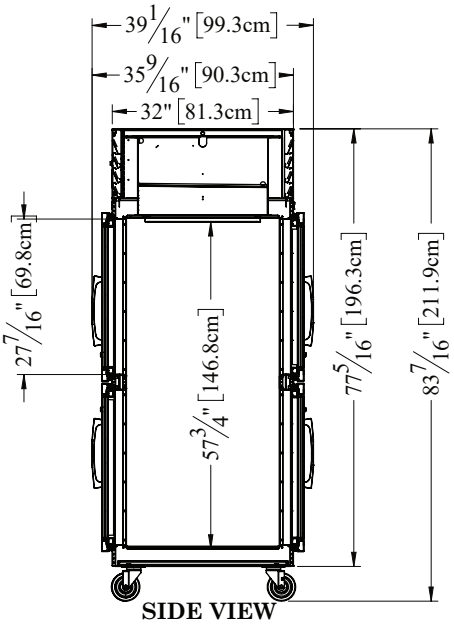

SIDE VIEW

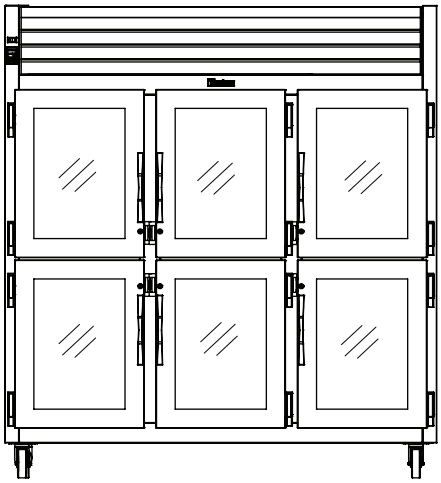

ELEVATION

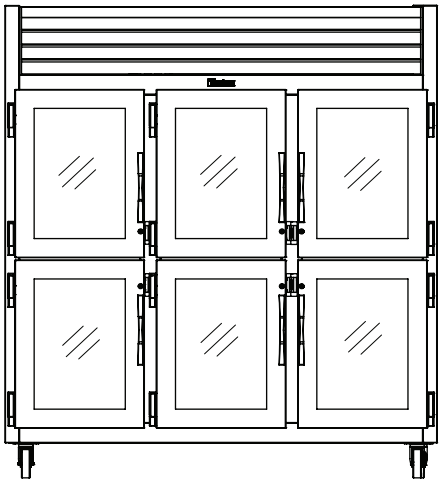

R Series

76" Wide Pass-Thru Refrigerator
Glass Door, 32" Deep, Self-Contained

CAD and/or Revit Files Available

https://traulsen.kclcad.com/

MODEL:
RHT332NPUT-FHG

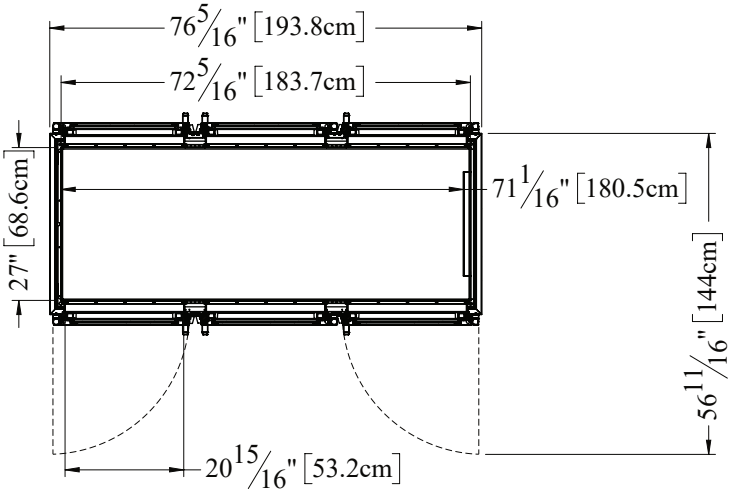

TOP VIEW

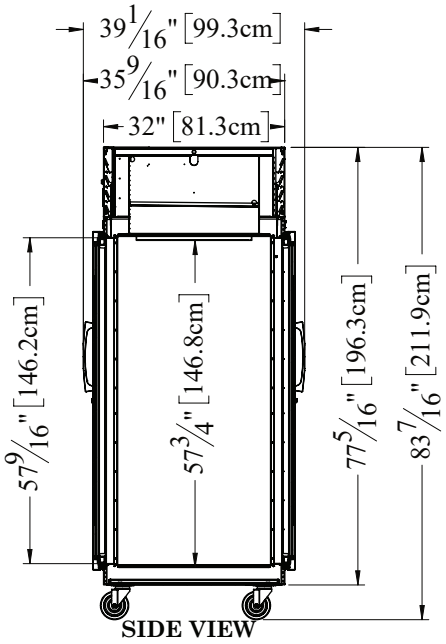

SIDE VIEW

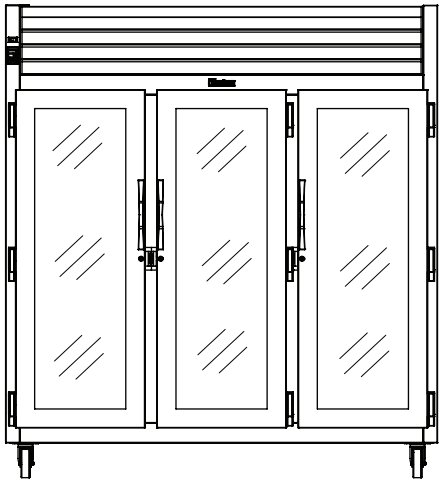

ELEVATION

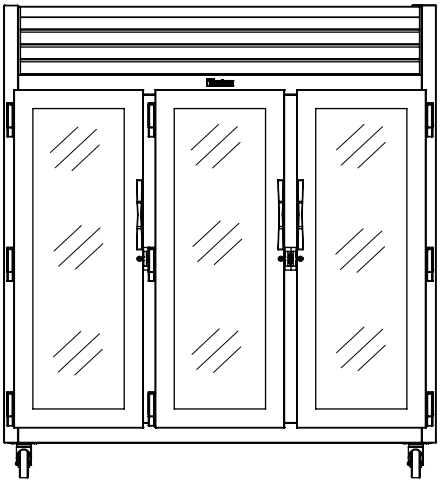

R Series

76" Wide Pass-Thru Refrigerator
Glass Door, 32" Deep, Self-Contained

MODELS:

RHT332NPUT-FHG, RHT332NPUT-HHG

MODELS	RHT332NPUT
DIMENSIONAL DATA	
Net capacity cu. ft.	76.25 (2159.2 cu l)
Length - overall in.	76 5/16" (193.8 cm)
Depth - overall in.	39 1/16" (99.3 cm)
Depth - over body in.	32" (81.3 cm)
Depth - door open 90° in.	56 11/16" (144 cm)
Clear door width in.	20 15/16" (53.2 cm)
Clear half-door height in.	27 7/16" (69.8 cm)
Clear full-door height in.	57 9/16" (146.2 cm)
Height - overall on 6" legs[2]	83 7/16" (211.9 cm)
No. Standard Shelves	9
Shelf area sq. ft.[3]	38.33 (3.6 sq. m)
ELECTRICAL DATA	
Voltage | Plug	115/60/1 | NEMA 5-20P
Full Load Amperes | kWh/24HR[4]	13.5 | 6.43; HHG | 6.55; FHG
REFRIGERATION DATA	
Refrigerant	R-290
Refrigerant Charge Amount oz.	4.5 (127.6 g)
BTU/HR | H.P.[1]	5120 | 1-1/4
SHIPPING DATA	
Length - Crated in.	91" (231.14 cm)
Width - Crated in.	42" (106.7 cm)
Height - Crated in.	85" (215.9 cm)
Volume - Crated cu. ft.	188 (5323.6 cu l)
Weight - Crated lbs.	1166 (528.9 kg)

NOTES: Figures in parentheses reflect metric equivalents.
1. Based on a 90°F ambient and 20°F evaporator.
2. 12" Top clearance preferred for optimum performance & service access.
3. Area of standard shelf compliment only, does not include storage area of additional shelves or available on cabinet bottom.
4. kWh/24HR = Kilowatt usage per 24 hours.

EQUIPMENT SPECIFICATIONS

CONSTRUCTION, HARDWARE, INSULATION

The interior is made from stainless steel and the cabinet exterior front, one piece sides, louver assembly, door and door liner is constructed of heavy gauge stainless steel. The exterior top & bottom are made from heavy-gauge galvanized steel. Included is a set of four adjustable 6" stainless steel legs.

Doors have removable plug cylinder locks & guaranteed for life gravity action, self-closing cam-lift hinges with stay-open feature. An external switch is included to activate interior LED lighting.

The gasket design simplifies cleaning & enhances longevity. Anti-condensate heater located behind each door. The unit has seamless, polished metal corners & vertical stainless steel handles. The cabinet is insulated with high density, non-CFC, foamed in place polyurethane.

SELF-CONTAINED REFRIGERATION SYSTEM

The unit uses a top-mounted, balanced system located behind the one piece louver assembly. The R-290 refrigerant is environmentally friendly & has low GWP. It features a finless StayClear™ condenser, thermostatic expansion valve, air-cooled hermetic variable speed compressor, plenum effect blower coil, large, high humidity evaporator coil outside the food zone & a top-mounted non-electric condensate evaporator.

The biased return air duct protects against warm kitchen air, promoting consistent temperatures & efficient operation. Operating temperatures are 34-38°F. A 9' cord and plug are provided.

CONTROL

Traulsen's Smart Control™ features advanced control algorithms & sophisticated diagnostic capabilities to optimize performance. Utilizing smart sensors, it adapts the operation of the refrigeration system to a variety of environments & usage patterns. The Smart Control™ also offers a complete set of visual alarms designed to alert the user to critical events such as power outages or a prolonged door opening. In the event of an alarm, a dedicated Alarm LED will illuminate, informing the user of the critical event and duration.

INTERIOR

The interior includes three factory installed pin-mounted, full-width coated wire shelves per section with no large gaps. Each shelf can support up to 225 lbs. Factory installed optional trayslides may be purchased in combination with, or in lieu of these.

WARRANTY

Both a six year parts & labor warranty and a seven year compressor warranty (self-contained models only) are provided standard.

When ordering please specify: Voltage, Hinging, and Options

Equipped with one NEMA 5-20P Plug

CONTINUED PRODUCT DEVELOPMENT MAY NECESSITATE SPECIFICATION CHANGES WITHOUT NOTICE.