Project _____

AIA # _____ SIS # _____

Item # _____ Quantity _____ C.S.I. Section 114000

R Series

Reach-In Heated Cabinet Model
32" Deep, Glass Door, W-Width

Models listed to the applicable UL, CSA and NSF standards by an approved NRTL. Consult the factory or unit data plate for additional information.

AVAILABLE CONFIGURATIONS

R Series Models	Door(s)
RHF132W-FHG	Full Height Glass
RHF132W-HHG	Half Height Glass

STANDARD PRODUCT FEATURES

- Stainless Steel Exterior/Interior
- Traulsen's Smart Control™ with LED Display
- Ducted Fan Air Distribution System
- Standard Operating Temperature Range 140-180°F
- ON/OFF Switch Located on Control Face
- Full or Half-Height Glass Door(s) with Lock(s)
- Self-Closing Doors with Stay Open Feature
- Stainless Steel Vertical Door Handle(s)
- Standard Door Hinging: 132W = Right (other hingings available)
- Automatically Activated LED Lights
- Stainless Steel Breaker Caps
- Three Adjustable, Coated Shelves Per Section, Supported on Pilasters (factory installed)
- Magnetic Snap-In EZ-Clean™ Door Gasket(s)
- Stainless Steel One-Piece Louver Assembly
- 9' Cord & Plug Attached
- Set of (4) 6" High Adjustable Stainless Steel Legs

ACCESSORIES & OPTIONS

- SmartConnect™ Monitoring App with Wi-Fi Connectivity
- Stainless Steel Finished Back with Rear Louvers
- Accommodates EZ-Clean™ Tray Racks
- #1 Type Trayslides to Accommodate either (1) 18" x 26" or (2) 14" x 18" Pans
- #4 Type Trayslides to Accommodate 18-19 Levels for 18" x 26" Sheet Pan
- Universal Type Tray Slides to Accommodate Either (1) 18" x 26", (2) 14" x 18" Sheet Pans, or (2) 12" x 20" Steam Table Pans; (4) Pairs per Half Section
- Additional Coated Wire or Optional Stainless Steel Shelves
- Optional 115/60/1 (1 section only) or 208-230/60/1 Voltage
- Kool Klad™ Exterior Laminate Decor
- Set of (4) $4^1/_8$" or 6" High Casters in Lieu of Legs
- Fluorescent Lights
- Other Support Options: $4^1/_2$" High Base or 6" High Kickplate (for use with standard legs)
- Prison/Correctional Facility Options

- GUARANTEED FOR LIFE CAM-LIFT HINGES

ENERGY STAR® Listed Commercial Hot Food Holding Cabinet
For full listing visit energystar.gov

Approved by_____ Date_____ Approved by_____ Date_____

R Series

Reach-In Heated Cabinet Model
32" Deep, Glass Door, W-Width

MODELS:

RHF132W-HHG, RHF132W-FHG

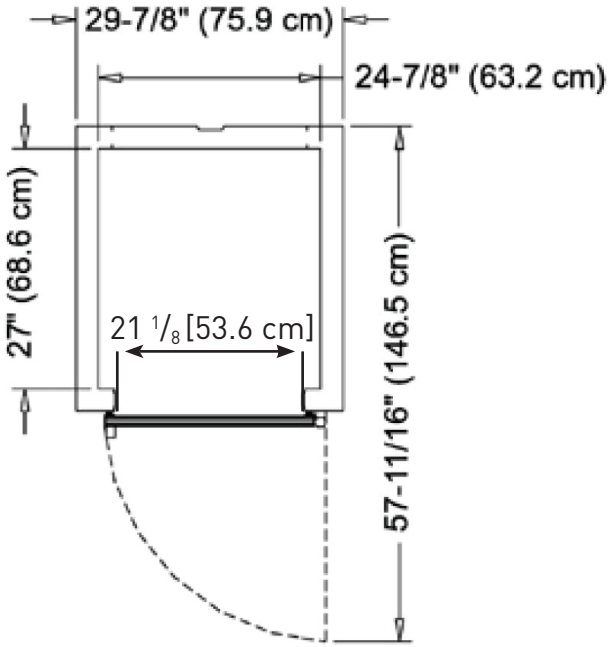

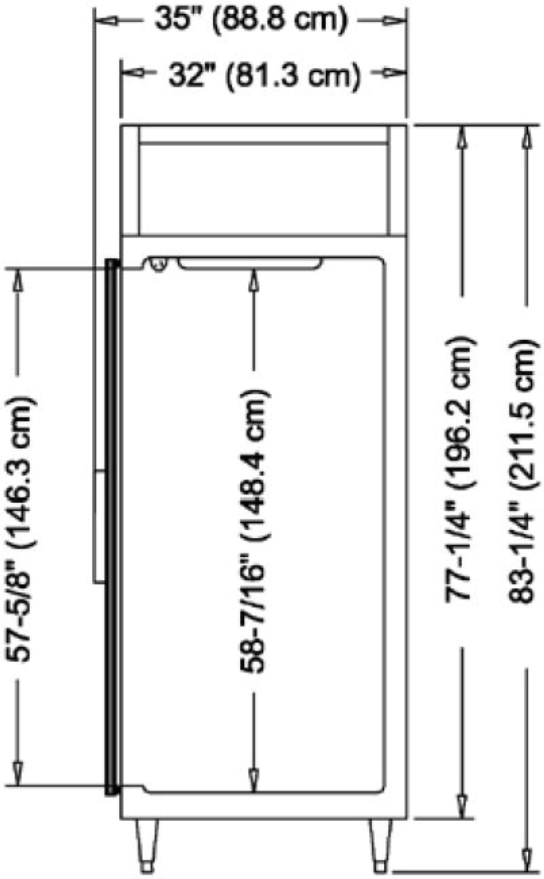

CAD and/or Revit Files Available

https://traulsen.kclcad.com/

R Series

Reach-In Heated Cabinet Model
32" Deep, Glass Door, W-Width

MODELS:

RHF132W-HHG, RHF132W-FHG

MODELS	RHF132W
DIMENSIONAL DATA	
Net capacity cu. ft.	23.87 (675.9 cu l)
Length - overall in.	29 7/8" (75.9 cm)
Depth - overall in.	35" (88.8 cm)
Depth - over body in.	32" (81.3 cm)
Depth - door open 90° in.	57 11/16" (146.5 cm)
Clear door width in.[1]	21 1/8" (53.6 cm)
Clear half-door height in.	27 1/2" (69.9 cm)
Clear full-door height in.	57 5/8" (146.3 cm)
Height - overall on 6" legs	83 1/4" (211.5 cm)
No. Standard Shelves	3
Shelf area sq. ft.[2]	13.46 (1.25 sq. m)
ELECTRICAL DATA	
Voltage[3] | Plug	208-230/115/60/1 | NEMA L14-20P
Heater Wattage | Full Load Amperes	@208V = 1500 | 7.7 @230V = 1836 | 8.5 @240V = 2000 | 8.8 @115V = 1500 | 14.2
SHIPPING DATA	
Length - Crated in.	48" (121.9 cm)
Depth - Crated in.	42" (106.7 cm)
Height - Crated in.	85" (215.9 cm)
Volume - Crated cu. ft.	99.17 (2808.2 cu l)
Weight - Crated lbs.	402 (182.3 kg)

NOTES: Figures in parentheses reflect metric equivalents.

1. Please note that the available cabinet width narrows for 5 3/8" from the top of the door frame to 20 1/8" in order to allow for the heater fans.
2. Area of standard shelf compliment only, does not include storage area of additional shelves or available on cabinet bottom.
3. Heater is capable of operation from 208V to 230V as supplied standard. Actual amp figure will change at any voltage other than 208V.

When ordering please specify: Voltage, Hinging, and Options

Equipped with one NEMA L14-20P Plug
(1 section models @ 208V only)

EQUIPMENT SPECIFICATIONS

CONSTRUCTION, HARDWARE, INSULATION

The interior is made from stainless steel and the cabinet exterior front, one piece sides, louver assembly, door and door liner is constructed of heavy gauge stainless steel. Included is a set of four adjustable 6" stainless steel legs.

Doors have a gasket-protecting metal door pan, removable plug cylinder locks & guaranteed for life gravity action, self-closing cam-lift hinges with a stay-open feature. An external switch is included to activate interior LED lighting.

The gasket design simplifies cleaning & enhances longevity. Anti-condensate heaters are located behind each door opening. The unit has seamless, polished metal corners & vertical stainless steel handles. The cabinet is insulated with high density, non-CFC, foamed in place polyurethane.

HEATING SYSTEM

The unit uses a low watt density, serpentine-style heater. Low velocity air is forced evenly across its large surface area to move heat through a down-air distribution duct without drying product. A vent is included at the top of the cabinet for positive humidity control. A 9' cord & plug is provided.

CONTROL

Traulsen's Smart Control™ features advanced control algorithms & sophisticated diagnostic capabilities to optimize performance. Utilizing smart sensors, it adapts the operation of the heating system to a variety of environments & usage patterns. The Smart Control™ also offers a complete set of visual alarms designed to alert the user to critical events such as power outages or a prolonged door opening. In the event of an alarm, a dedicated Alarm LED will illuminate, informing the user of the critical event and duration.

INTERIOR

The interior includes three factory installed pilaster-mounted, full-width coated wire shelves per section with no large gaps. Each shelf can support up to 225 lbs. Factory installed optional trayslides may be purchased in combination with, or in lieu of these.

WARRANTY

6-Year Parts & Labor Warranty

CONTINUED PRODUCT DEVELOPMENT MAY NECESSITATE SPECIFICATION CHANGES WITHOUT NOTICE.