USA FOODSERVICE DIVISION

TBR84-PTSZ1-L-B-SSS-SSS-1

True Bar Refrigerator • Pass-thru single zone refrigerator

Project Name	Location	Item #	Quantity	Model #	AIA #	SIS #



FEATURES

- R290 Hydrocarbon refrigerant.
- Temperatures of 33°F to 38°F (.5°C to 3.3°C).
- Exterior: Black powder coated cold rolled steel with stainless steel countertop.
- Interior: Stainless steel.
- True's self-cleaning RCU technology eliminates the need to clean the condenser coil, reduces energy consumption and helps maintain the coldest temperatures and freshest product.
- White LED lighting.
- NSF/ANSI standard 7 compliant for open food product.
- UL Rated for outdoor use.
- Three (3) interior access ports.
- Field reversible doors.
- Zero clearance (side and back).
- Front air intake / front air discharge.
- Electronic temperature control with exterior digital display.

ROUGH-IN DATA

Specifications subject to change without notice. Chart dimensions rounded up to the nearest 1/8" (millimeters rounded up to next whole number).

Model	Doors	Shelves	Capacity		Cabinet Dimensions (inches) (mm)			115V/60/1 Voltage			Cord Length‡ (total ft.) (total m)	Crated Weight (lbs.) (kg)
			12 oz. Cans	12 oz. Bottles	W	D†	H	HP	Amps	NEMA		
TBR84-PTSZ1-L-B-SSS-SSS-1	6	9	164 6-pks	88 6-pks	84	27	34¾	¼	3.2	5-15P	10	425
					2134	684	881				3.04	193

† Depth does not include 1½" (35 mm) for door handles. *Height does not include ¼" (7 mm) for leg levelers.
‡ Cord length listed represents usable cord length.

MADE WITH INNOVATION IN THE USA · c UL us · natural refrigerant.

APPROVALS

AVAILABLE AT

115/60/1 NEMA-5-15R

Unit completely pre-wired at factory and ready for final connection to a 115/60/1 phase, 15 amp dedicated outlet. Cord and plug set included.

TBR84-PTSZ1-L-B-SSS-SSS-1

True Bar Refrigerator • Pass-thru single zone refrigerator

ADDITIONAL FEATURES

Refrigeration System
- Factory engineered, self-contained, capillary tube system.
- Environmentally friendly R290 hydrocarbon refrigerant.
- Forced air refrigeration system which maintains 33°F to 38°F (.5°C to 3.3°C) product temperatures.
- True's self-cleaning RCU technology eliminates the need to clean the condenser coil, reduces energy consumption and helps maintain the coldest temperatures and freshest product.

Cabinet Construction
- Exterior: Black, powder coated cold-rolled steel with stainless steel countertop.
- Interior: Stainless steel floor and sides with ABS plastic ceiling.
- Insulation: Entire cabinet is foamed-in-place using a high density, polyurethane insulation that has zero ozone depletion and zero global warming potential.
- Base fitted with leg levelers.

Doors
- Door locks standard in countertop.
- Field Reversible Doors standard (reverse hinge kit included).

Shelving
- Nine (9) adjustable, gray PVC coated wire shelves. 21 11/16" W x 18" D (551 mm x 458 mm). Four (4) polished stainless steel shelf clips included per shelf.
- Aluminum shelf support pilasters. Shelves are adjustable on ½" (13 mm) increments.

Model Features
- NSF/ANSI Standard 7 compliant for open food product.
- UL approved for outdoor use.
- Electronic temp control with exterior digital display.
- Three (3) access ports standard (see drawing for locations).

Electrical
- Unit completely pre-wired at factory and ready for final connection to a 115/60/1 phase, 15 amp dedicated outlet. Cord and plug set included.

Optional TBR Features/Accessories (upcharge and lead times may apply)
- ☐ Castors 7/8"H (23 mm) rollers, 2"D (51mm), 3"D (77mm), 4"D (102mm), 5"D (127mm) castors
- ☐ 6"H (153mm) legs
- ☐ 6"H (153mm) seismic legs
- ☐ Alternative temperature zones available (55° red wine, 45° white wine)
- ☐ Right side compressor
- ☐ Shelving (wine, cut-out, additional standard wire, available in black or gray)
- ☐ Bottle Organizers (available in black or gray)
- ☐ Additional Access Ports
- ☐ Unit is available in a panel ready option which changes the nomenclature. Contact factory for details

PLAN VIEWS

Plan View Notes: Dimensions in brackets are in millimeters. • Depth does not include 1½" (35 mm) for door handles. • Height does not include ¼" (7 mm) for leg levelers.

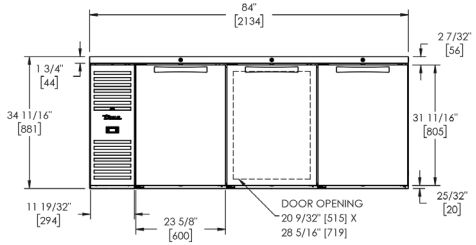

FRONT VIEW

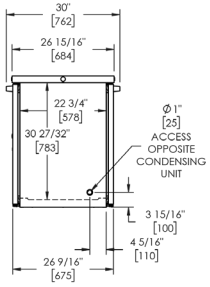

SIDE VIEW

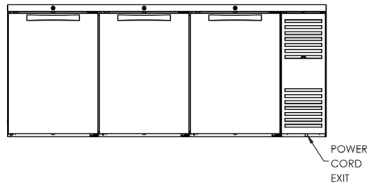

BACK VIEW

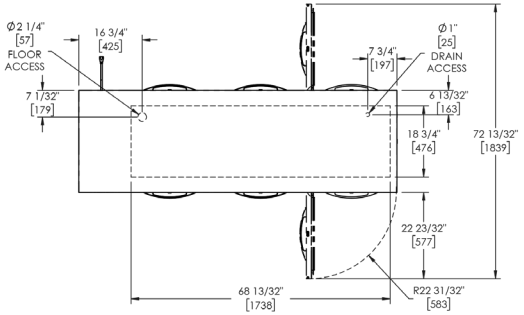

TOP VIEW