HIGH h CONVEYOR 2620™

TURBOCHEF

PERFORMANCE

The High h Conveyor 2620 offers high-heat transfer rates for accelerated cooking, a small enough footprint to fit virtually any application, and does not require the energy consumption and higher HVAC needs of larger ovens.

VENTILATION

- UL (KNLZ) listed for ventless operation.†
- EPA 202 test (8 hr):
  - Product: Pepperoni Pizza
    Results: 1.05 mg/m^3
  - Product: Sandwiches
    Results: 1.91 mg/m^3
    Ventless Requirement: <5.00 mg/m^3
- Internal catalytic filtration to limit smoke, grease, and odor emissions.

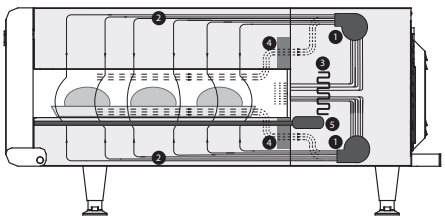

1. Blower Motor
2. Impinged Air
3. Impingement Heater
4. Catalytic Converters (optional)
5. Conveyor Motor

EXTERIOR CONSTRUCTION

- 430 stainless steel front, top, sides and back
- Cool to touch covers and panels
- Capacitive One-Touch screen with tempered glass cover

INTERIOR CONSTRUCTION

- Stainless steel interior construction
- 26” x 20” cook chamber

FEATURES

- Small footprint with even more throughput than the HhC 2020
- Independently-controlled top and bottom air impingement
- Variable-speed High h recirculating impingement airflow system
- Stackable design up to three high (requires stacking kits)
- Intuitive One-Touch interface with customizable images
- Unlimited recipe storage
- Variable-speed blower motors
- Idle mode for energy conservation
- Built-in self diagnostics for monitoring oven components
- Left or right feed conveyor belt direction via software
- Includes plug and cord (6 ft. nominal)
- Includes two 6” conveyor extensions
- Smart voltage sensor technology (U.S. only)
- Warranty includes 1-year parts and labor
- Open Kitchen from Powerhouse Dynamics connects your equipment to the cloud, offering real time, automated monitoring, predictive maintenance, over-the-air updates, and operational insights. Visit powerhousedynamics.com for more information.

OPTIONAL FEATURES

- Split belt with independent speed control (50/50 or 70/30)
- Dual catalytic converters for ventless operation.†

STANDARD INCLUDED ACCESSORIES

- Oven Cleaner Starter Kit, PN: 105702 (Qty 1) for ventless models only
- Air Filters, PN: HCT-4067 (Qty 2)

This product conforms to the ventilation recommendations set forth by NFPA96 using EPA202 test method.

* Smart Voltage Sensor Technology does not compensate for lack of or over voltage situations. It is the responsibility of the owner to supply voltage to the unit according to the specifications on the back of this sheet.

† Ventless certification is for all food items except for foods classified as “fatty raw proteins.” Such foods include raw bone-in, skin-on chicken, raw hamburger meat, raw bacon, raw sausage, raw steaks, etc. If cooking these types of foods, consult local HVAC codes and authorities to ensure compliance with ventilation requirements.

Ultimate ventless allowance is dependent upon AHJ approval, as some jurisdictions may not recognize the UL certification or application. If you have questions regarding ventless certifications or local codes please call 1-800-908-8726.

TurboChef reserves the right to make substitutions of components or change specifications without prior notice.

DOC-1392 / Rev R / October 2025

2801 Trade Center Drive, Carrollton, TX 75007
+1 214-379-6000 (Worldwide) | 1-800-908-8726 (US & Canada) | turbochef.com

Front View

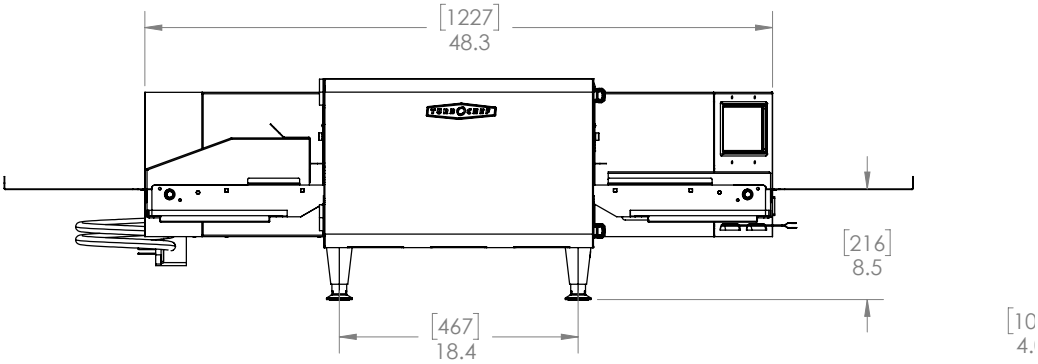

Side View

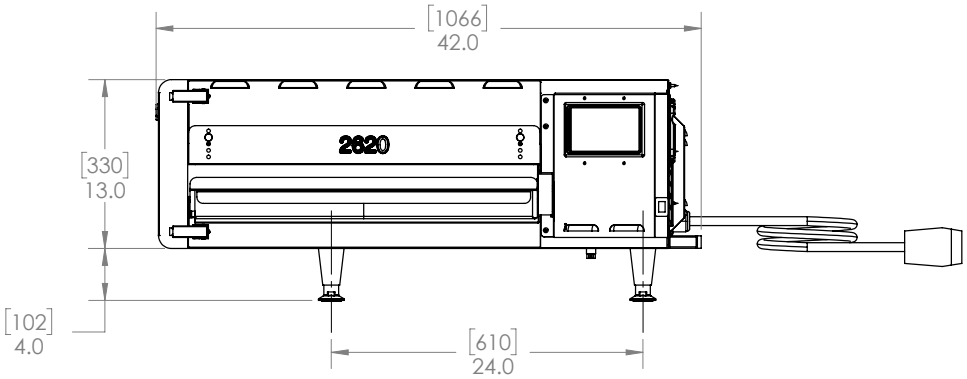

Top View

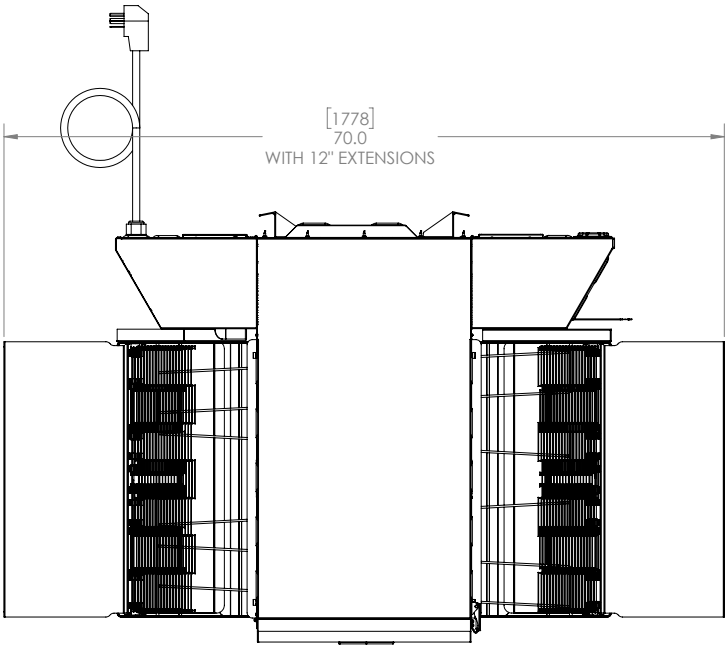

2801 Trade Center Drive, Carrollton, TX 75007
+1 214-379-6000 (Worldwide) | 1-800-908-8726 (US & Canada) | turbochef.com

Stacked Views

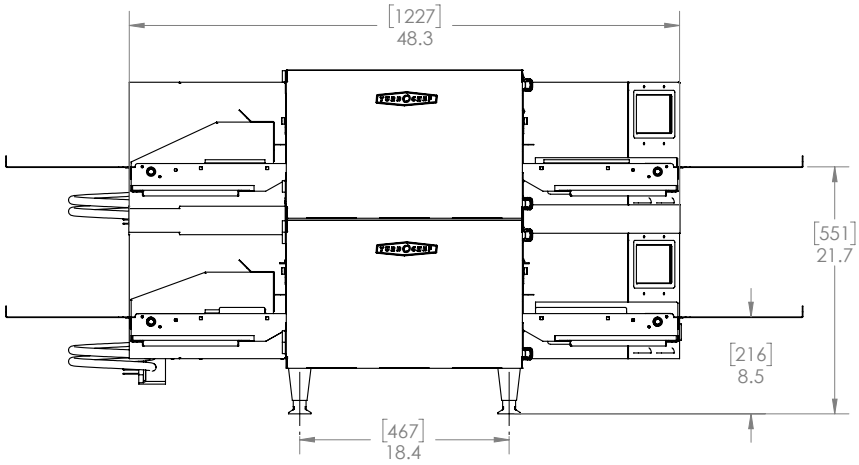

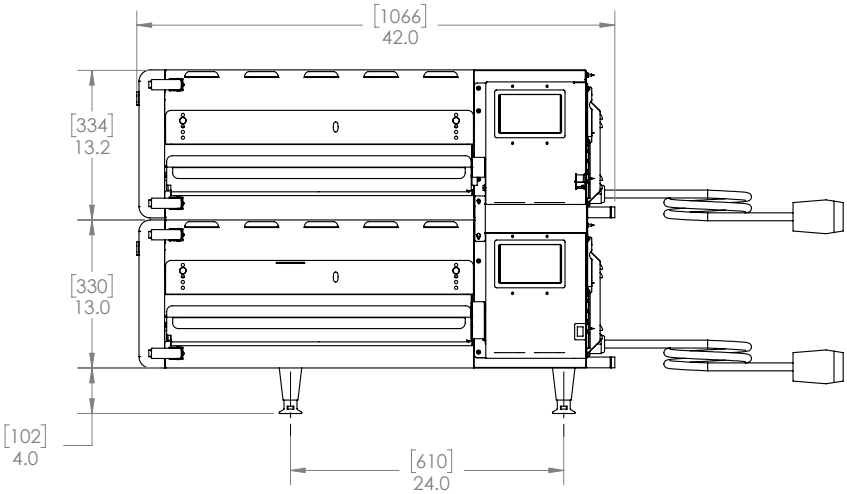

2801 Trade Center Drive, Carrollton, TX 75007
+1 214-379-6000 (Worldwide) | 1-800-908-8726 (US & Canada) | turbochef.com

TURBOCHEF

DIMENSIONS

Height	17.0”	432 mm
Width	48.3”	1227 mm
Depth	41.7”	1059 mm
Weight	260 lb.	118 kg
Cook Chamber Dimensions		
Baking Area	3.7 ft ^{2}	0.34 m ^{2}
Belt Length	48.3”	1227 mm
Belt Width (Single)	26”	660 mm
Belt Width (50/50 Split)	12.5” / 12.5”	318 mm / 318 mm
Belt Width (70/30 Split)	17” / 8”	431 mm / 203 mm
Adjustable Opening (Min/Max)	1” / 3”	25 mm / 76 mm
Max Operating Temp	550°F	288°C
Bake Time Range	56 seconds to 15 minutes, 30 seconds	
Wall Clearance (Oven not intended for built-in installation)		
Top	10”	254 mm
Sides	2”	51 mm
Back	2”	51 mm

ELECTRICAL SPECIFICATIONS – MULTI PHASE

United States
Single: HCW-9500-501 / HCW-9500-501-V (Ventless)
50/50 Split: HCW-9500-506 / HCW-9500-506-V (Ventless)
70/30 Split: HCW-9500-511 / HCW-9500-511-V (Ventless)

Voltage	208/240 VAC	NEMA 15-50P
Frequency	50/60 Hz	
Current Draw	40A	
Supply	4 Wire	
Breakers	50A	

Canada
Single: HCW-9500-502C / HCW-9500-502C-V (Ventless)
50/50 Split: HCW-9500-507C / HCW-9500-507C-V (Ventless)
70/30 Split: HCW-9500-512C / HCW-9500-512C-V (Ventless)

Voltage	208/240 VAC	UL 4 Pin, 60A
Frequency	50/60 Hz	
Current Draw	40/46A	
Supply	4 Wire	
Breakers	60A	

Europe/Asia (Delta)
Single: HCW-9500-503-ED / HCW-9500-503-ED-V (Ventless)
50/50 Split: HCW-9500-508-ED / HCW-9500-508-ED-V (Ventless)
70/30 Split: HCW-9500-513-ED / HCW-9500-513-ED-V (Ventless)

Voltage	220 - 240 VAC	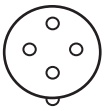 IEC 4 Pin, 63A
Frequency	50/60 Hz	
Current Draw	40A	
Supply	4 Wire	
Breakers	50A	

Europe/Asia (WYE)
Single: HCW-9500-504-EW / HCW-9500-504-EW-V (Ventless)
50/50 Split: HCW-9500-509-EW / HCW-9500-509-EW-V (Ventless)
70/30 Split: HCW-9500-514-EW / HCW-9500-514-EW-V (Ventless)

Voltage	380 - 415 VAC	IEC 5 Pin, 32A
Frequency	50/60 Hz	
Current Draw	20A	
Supply	5 Wire	
Breakers	32A	

Australia
Single: HCW-9500-505-AU / HCW-9500-505-AU-V (Ventless)
50/50 Split: HCW-9500-510-AU / HCW-9500-510-AU-V (Ventless)
70/30 Split: HCW-9500-515-AU / HCW-9500-515-AU-V (Ventless)

Voltage	380 - 415 VAC	IEC 5 Pin, 32A
Frequency	50/60 Hz	
Current Draw	20A	
Supply	5 Wire	
Breakers	32A	

*Under normal operation, the oven will not exceed the max input value.

⚠ **TurboChef recommends installing a type D circuit breaker for European installations.**

⚠ **IMPORTANT:** If the oven is placed near a grill or stove, a divider must exist between the oven and the open heat source, with a minimum of 6” (153 mm) between the oven and the divider. If the oven is placed near a fryer, a divider must exist between the oven and fryer, with a minimum of 12” (305 mm) between the oven and the divider.

SHIPPING INFORMATION

U.S.: All ovens shipped within the U.S. are packaged in a double-wall corrugated box banded to a wooden skid.

International: All ovens shipped by air or less than container load are packaged in wooden crates. Crates are charged at an additional cost.

International LCL: Crates are optional (recommended) at additional cost.

Box size: 54” x 48” x 26” (1372 mm × 1219 mm × 660 mm)
Crate size: 55” x 49” x 27” (1397 mm × 1245 mm × 686 mm)

Item class: 92.5

Approximate boxed weight: 360 lb. (163 kg)
Approximate crated weight: 405 lb. (184 kg)

Minimum entry clearance required for box: 26” (660 mm)
Minimum entry clearance required for crate: 27” (686 mm)

DOC-1392 / Rev R / October 2025

2801 Trade Center Drive, Carrollton, TX 75007
+1 214-379-6000 (Worldwide) | 1-800-908-8726 (US & Canada) | turbochef.com